THIS DRAWING IS UNPUBLISHED. RELEASED FOR PUBLICATION -.- .
© COPYRIGHT - By - ALL RIGHTS RESERVED.

REVISIONS					
P	LTR	DESCRIPTION	DATE	DWN	APVD
	Z	REVISED PER ECO-17-002903	20MAR2017	AP	DG

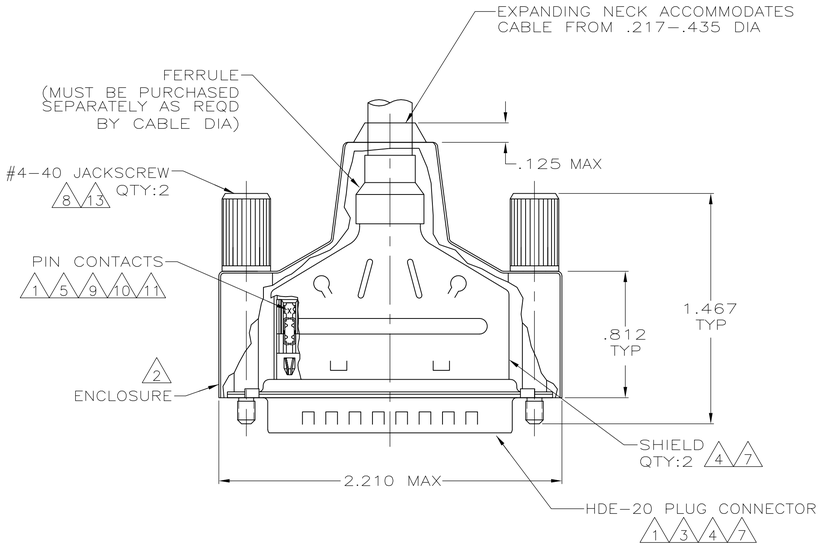

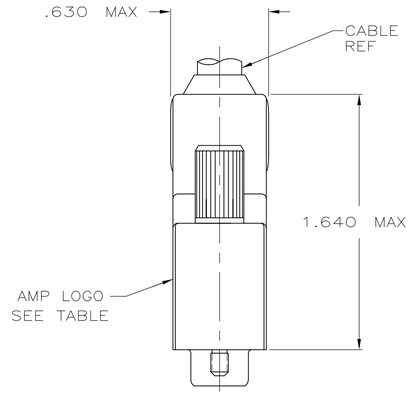

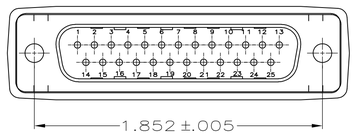

1. PLUG CONNECTOR FULLY LOADED WITH CONTACTS. ALL OTHER PARTS ARE SHIPPED UNASSEMBLED. EACH PART INDIVIDUALLY BULK PACKED.
2. FLAME RETARDANT 94V-0 RATED, POLYOLEFIN OR PVC, BLACK.
3. FLAME RETARDANT 94V-0 RATED, GLASS-FILLED, NYLON OR POLYESTER, BLACK.
4. STEEL PER ASTM A109.
5. PHOSPHOR BRONZE PER QQ-B-750.
6. GOLD PLATING PER MIL-G-45204, NICKEL PLATING PER QQ-N-290, TIN PLATING PER MIL-T-10727, ZINC PLATING PER B633, TYPE II, CLASS SCI, BLACK CHROMATE.
7. TIN PLATED.
8. BLACK ZINC FLAKE COATING.
9. CONTACTS PLATED GOLD FLASH FOR A LENGTH OF .150 MIN FROM MATING END, .000100-.000200 BRIGHT TIN OR BRIGHT TIN-LEAD IN WIRE TERMINATION AREA, ALL OVER .000030 MIN NICKEL UNDERPLATE ON ENTIRE CONTACT.
10. PLATED WITH .000030 MIN GOLD FOR LENGTH OF .150 MIN FROM MATING END, WITH POINT OF MEASUREMENT .075 FROM MATING END OF CONTACT, .000100-.000200 TIN OR TIN LEAD ON TERMINATION END, ALL OVER .000050 MIN NICKEL ON ENTIRE CONTACT.
11. NUMBER ON CONTACT INDICATES WIRE RANGE.
12. OBSOLETE PART NUMBER.
13. CARBON STEEL, C1022.
14. CONTACTS GOLD PLATED FOR A LENGTH OF .150 MIN FROM MATING END, .000030 MIN GOLD IN MATED AREA, .000100-.000200 MATTE TIN IN WIRE TERMINATION AREA, ALL OVER .000050 MIN NICKEL UNDERPLATE ON ENTIRE CONTACT.
    OR
    CONTACTS GOLD PLATED FOR A LENGTH OF .150 MIN FROM MATING END, GOLD FLASH OVER PALLADIUM-NICKEL, .000030 MIN TOTAL IN MATED AREA, .000100-.000200 MATTE TIN IN WIRE TERMINATION AREA, ALL OVER .000050 MIN NICKEL UNDERPLATE ON ENTIRE CONTACT.
15. CONTACTS PLATED GOLD FLASH FOR A LENGTH OF .150 MIN FROM MATING END, .000100-.000200 MATTE TIN IN WIRE TERMINATION AREA, ALL OVER .000030 MIN NICKEL UNDERPLATE ON ENTIRE CONTACT.
16. OBSOLETE PARTS: OBSOLETE CIS STREAMLINING PER D.RENAUD/D.SINISI.

	CONTACT FINISH	LOGO	11 WIRE RANGE		PART NUMBER
16 OBSOLETE	15	YES	3	20-22	~~1-747948-9~~
	15	YES	2	22-26	1-747948-8
	15	YES	1	26-30	12 1-747948-7
	14	YES	2	22-26	1-747948-6
	14	YES	1	26-30	1-747948-5
	9	NO	3	20-22	12 1-747948-2
		NO	2	22-26	12 1-747948-1
		NO	1	26-30	12 1-747948-0
	10	NO	3	20-22	12 747948-9
		NO	2	22-26	12 747948-8
		NO	1	26-30	12 747948-7
SUPERCEDED	9	YES	3	20-22	~~747948-6~~
SUPERCEDED BY1-747948-8		YES	2	22-26	~~747948-5~~
		YES	1	26-30	12 747948-4
	10	YES	3	20-22	12 747948-3
SUPERCEDED BY1-747948-6		YES	2	22-26	~~747948-2~~
SUPERCEDED BY1-747948-5		YES	1	26-30	~~747948-1~~

THIS DRAWING IS A CONTROLLED DOCUMENT.

DIMENSIONS: INCHES

TOLERANCES UNLESS OTHERWISE SPECIFIED:
0 PLC ± -
1 PLC ± -
2 PLC ± -
3 PLC ± .020
4 PLC ± -
ANGLES ± -

MATERIAL 2 3 4 5 13

FINISH CONTACTS: SEE TABLE 6 7 8

DWN 11-17-04 L. VARELA - DOCK5
CHK 11-17-04 J. GERACE
APVD 11-17-04 M. WALMSLEY

PRODUCT SPEC 108-40011 & 108-40030
APPLICATION SPEC 114-40002
WEIGHT 0.000000

TE Connectivity

NAME SHIELDING ENCLOSURE KIT, PLUG, SIZE 3, 25 POSN, AMPLIMITE HDE-20

SIZE	CAGE CODE	DRAWING NO	RESTRICTED TO
A1	00779	C-747948	-

CUSTOMER DRAWING SCALE 2:1 SHEET 1 OF 1 REV Z

4805 (1/15)