# Solid Tantalum Surface Mount Capacitors TANTAMOUNT™ Conformal Coated, Extended Range, Military, MIL-PRF-55365/13 Qualified

## FEATURES

- Weibull failure rates B, C, T
- Tape and reel available per EIA 481
- Termination finishes available: gold plate, solder plated, solder fused, and hot solder dipped
- Material categorization: for definitions of compliance please see www.vishay.com/doc?99912

Pb-free Available
RoHS* Available

**Note**

* This datasheet provides information about parts that are RoHS-compliant and / or parts that are non RoHS-compliant. For example, parts with lead (Pb) terminations are not RoHS-compliant. Please see the information / tables in this datasheet for details

## LINKS TO ADDITIONAL RESOURCES

3D Models | Calculators | Simulation Tools | Parametric Search

## PERFORMANCE CHARACTERISTICS

www.vishay.com/doc?40211

**Operating Temperature:** -55 °C to +125 °C (above 85 °C, voltage derating is required)

**Capacitance Range:** 0.33 µF to 330 µF

**Capacitance Tolerance:** ± 5 %, ± 10 %, ± 20 %

**Voltage Rating:** 4 $V_{DC}$ to 35 $V_{DC}$

**Moisture Sensitivity Level 1**

## ORDERING INFORMATION

| CWR16 | D | B | 335 | K | B | A | A | /TR |
|---|---|---|---|---|---|---|---|---|
| TYPE | VOLTAGE | TERMINATION FINISH | CAPACITANCE | CAPACITANCE TOLERANCE | FAILURE RATE %/1000 h | CASE CODE | SURGE CURRENT | PACKAGING (2) |
| | C = 4 V<br>D = 6 V<br>F = 10 V<br>H = 15 V<br>J = 20 V<br>K = 25 V<br>M = 35 V | B = gold<br>C = hot solder dipped<br>H = solder plated<br>K = solder fused | This is expressed in picofarads. The first two digits are the significant figures. The third is the number of zeros to follow. | J = ± 5 %<br>K = ± 10 %<br>M = ± 20 % | B = 0.1<br>C = 0.01<br>T = 0.01 (1) | A<br>B<br>C<br>D<br>E<br>F<br>G<br>H | A = 10 cycles at +25 °C<br>B = 10 cycles at -55 °C and +85 °C<br>C = 10 cycles at -55 °C and +85 °C (before Weibull grading)<br>Z = no surge current | Blank = bulk, plastic tray<br>/FA = waffle pack<br>/PR = 100 pcs reel<br>/HR = half reel<br>/TR = full reel |

**Notes**

(1) T level requires surge current option “C”. Capacitors are recommended for “space applications”. Shipped in tape and reel / or waffle packaging only

(2) Individual reels may include capacitors of two date codes that will be separated by an empty pocket.
Reel labels will show both date codes. The date code on the top (DC1) is the inner tape layers or first capacitors reeled


For technical questions, contact: tantalum@vishay.com
THIS DOCUMENT IS SUBJECT TO CHANGE WITHOUT NOTICE. THE PRODUCTS DESCRIBED HEREIN AND THIS DOCUMENT ARE SUBJECT TO SPECIFIC DISCLAIMERS, SET FORTH AT www.vishay.com/doc?91000

## DIMENSIONS in inches [millimeters]

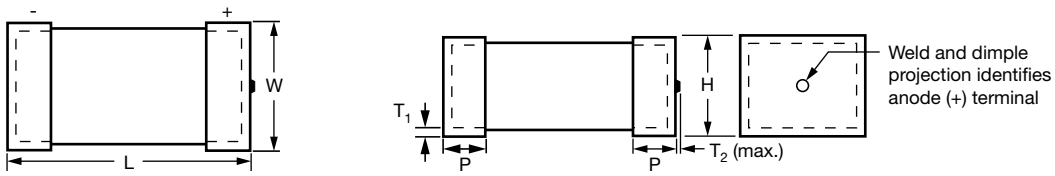


| CASE CODE | L | W | H | P | $T_1$ | $T_2$ (max.) |
|---|---|---|---|---|---|---|
| A | 0.100 ± 0.015 [2.54 ± 0.38] | 0.050 ± 0.015 [1.27 ± 0.38] | 0.050 ± 0.015 [1.27 ± 0.38] | 0.030 ± 0.005 [0.76 ± 0.13] | 0.005 [0.13] | 0.015 [0.38] |
| B | 0.150 ± 0.015 [3.81 ± 0.38] | 0.050 ± 0.015 [1.27 ± 0.38] | 0.050 ± 0.015 [1.27 ± 0.38] | 0.030 ± 0.005 [0.76 ± 0.13] | 0.005 [0.13] | 0.015 [0.38] |
| C | 0.200 ± 0.015 [5.08 ± 0.38] | 0.050 ± 0.015 [1.27 ± 0.38] | 0.050 ± 0.015 [1.27 ± 0.38] | 0.030 ± 0.005 [0.76 ± 0.13] | 0.005 [0.13] | 0.015 [0.38] |
| D | 0.150 ± 0.015 [3.81 ± 0.38] | 0.100 ± 0.015 [2.54 ± 0.38] | 0.050 ± 0.015 [1.27 ± 0.38] | 0.030 ± 0.005 [0.76 ± 0.13] | 0.005 [0.13] | 0.015 [0.38] |
| E | 0.200 ± 0.015 [5.08 ± 0.38] | 0.100 ± 0.015 [2.54 ± 0.38] | 0.050 ± 0.015 [1.27 ± 0.38] | 0.030 ± 0.005 [0.76 ± 0.13] | 0.005 [0.13] | 0.015 [0.38] |
| F | 0.220 ± 0.015 [5.59 ± 0.38] | 0.135 ± 0.015 [3.43 ± 0.38] | 0.070 ± 0.015 [1.78 ± 0.38] | 0.030 ± 0.005 [0.76 ± 0.13] | 0.005 [0.13] | 0.015 [0.38] |
| G | 0.265 ± 0.015 [6.73 ± 0.38] | 0.110 ± 0.015 [2.79 ± 0.38] | 0.110 ± 0.015 [2.79 ± 0.38] | 0.050 ± 0.005 [1.27 ± 0.13] | 0.005 [0.13] | 0.015 [0.38] |
| H | 0.285 ± 0.015 [7.24 ± 0.38] | 0.150 ± 0.015 [3.81 ± 0.38] | 0.110 ± 0.015 [2.79 ± 0.38] | 0.050 ± 0.005 [1.27 ± 0.13] | 0.005 [0.13] | 0.015 [0.38] |

**Note**

- When solder coated terminations are required, add 0.015" [0.38 mm] to termination dimension tolerance

## RATINGS AND CASE CODES

| µF | 4 V | 6 V | 10 V | 15 V | 20 V | 25 V | 35 V |
|---|---|---|---|---|---|---|---|
| 0.33 | | | | | | | A |
| 0.47 | | | | | | A | |
| 0.68 | | | | | A | | |
| 1.0 | | | | A | A | B | |
| 1.5 | | | | A | B | | |
| 2.2 | | | A | A | B | D | |
| 3.3 | A | A | A | B | D | E | |
| 4.7 | A | A | B / C | B / C / D | E | | |
| 6.8 | A | B | B / C / D | D / E | E | F | G |
| 10 | B | B | B / C / D / E | D / E | F | | H |
| 15 | B | B / D / E | D / E | E / F | F | G | H |
| 22 | B / D | D / E | E | F | G | G / H | |
| 33 | D / E | E | F | F / G | H | H | |
| 47 | E | F | F / G | G / H | H | | |
| 68 | E | F / G | G | G / H | | | |
| 100 | F | G | G / H | H | | | |
| 150 | G | G | H | | | | |
| 220 | H | H | H | | | | |
| 330 | H | H | | | | | |

## MARKING AND POLARITY

Conformal coated capacitors have no marking on capacitor body. Rating and date code information is provided on the reel label. Negative end cap or termination is identified by black epoxy. Positive end cap or termination is sealed with pink epoxy, in addition to the weld projection.

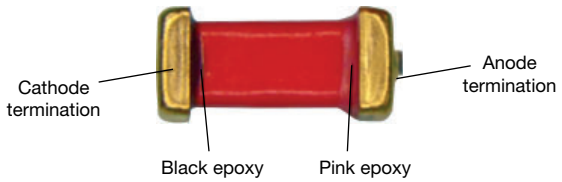



For technical questions, contact: tantalum@vishay.com
THIS DOCUMENT IS SUBJECT TO CHANGE WITHOUT NOTICE. THE PRODUCTS DESCRIBED HEREIN AND THIS DOCUMENT ARE SUBJECT TO SPECIFIC DISCLAIMERS, SET FORTH AT www.vishay.com/doc?91000

## STANDARD RATINGS

| CAPACITANCE (µF) | CASE CODE | PART NUMBER | MAX. DCL (µA) AT | | | MAX. DF (%) AT | | | MAX. ESR AT +25 °C 100 kHz (Ω) |
|---|---|---|---|---|---|---|---|---|---|
| | | | +25 °C | +85 °C | +125 °C | +25 °C | +85 °C +125 °C | -55 °C | |
| **4 $V_{DC}$ AT +85 °C; 2.7 $V_{DC}$ AT +125 °C** | | | | | | | | | |
| 3.3 | A | CWR16C(1)335(2)(3)A(4)(5) | 1 | 10 | 12 | 6 | 8 | 8 | 12.0 |
| 4.7 | A | CWR16C(1)475(2)(3)A(4)(5) | 1 | 10 | 12 | 6 | 8 | 8 | 12.0 |
| 6.8 | A | CWR16C(1)685(2)(3)A(4)(5) | 1 | 10 | 12 | 6 | 8 | 8 | 12.0 |
| 10 | B | CWR16C(1)106(2)(3)B(4)(5) | 1 | 10 | 12 | 8 | 10 | 10 | 8.0 |
| 15 | B | CWR16C(1)156(2)(3)B(4)(5) | 1 | 10 | 12 | 8 | 10 | 10 | 8.0 |
| 22 | B | CWR16C(1)226(2)(3)B(4)(5) | 1 | 10 | 12 | 8 | 10 | 10 | 8.0 |
| 22 | D | CWR16C(1)226(2)(3)D(4)(5) | 1 | 10 | 12 | 8 | 10 | 12 | 4.0 |
| 33 | D | CWR16C(1)336(2)(3)D(4)(5) | 2 | 20 | 24 | 8 | 10 | 12 | 4.0 |
| 33 | E | CWR16C(1)336(2)(3)E(4)(5) | 2 | 20 | 24 | 8 | 10 | 12 | 3.0 |
| 47 | E | CWR16C(1)476(2)(3)E(4)(5) | 2 | 20 | 24 | 8 | 10 | 12 | 3.0 |
| 68 | E | CWR16C(1)686(2)(3)E(4)(5) | 3 | 30 | 36 | 8 | 10 | 12 | 3.0 |
| 100 | F | CWR16C(1)107(2)(3)F(4)(5) | 4 | 40 | 48 | 10 | 12 | 12 | 2.0 |
| 150 | G | CWR16C(1)157(2)(3)G(4)(5) | 6 | 60 | 72 | 10 | 12 | 12 | 1.0 |
| 220 | H | CWR16C(1)227(2)(3)H(4)(5) | 8 | 80 | 96 | 10 | 12 | 12 | 1.0 |
| 330 | H | CWR16C(1)337(2)(3)H(4)(5) | 10 | 100 | 120 | 10 | 12 | 12 | 0.9 |
| **6 $V_{DC}$ AT +85 °C; 4 $V_{DC}$ AT +125 °C** | | | | | | | | | |
| 3.3 | A | CWR16D(1)335(2)(3)A(4)(5) | 1 | 10 | 12 | 6 | 8 | 8 | 12.0 |
| 4.7 | A | CWR16D(1)475(2)(3)A(4)(5) | 1 | 10 | 12 | 6 | 8 | 8 | 12.0 |
| 6.8 | B | CWR16D(1)685(2)(3)B(4)(5) | 1 | 10 | 12 | 6 | 8 | 8 | 8.0 |
| 10 | B | CWR16D(1)106(2)(3)B(4)(5) | 1 | 10 | 12 | 6 | 8 | 8 | 8.0 |
| 15 | B | CWR16D(1)156(2)(3)B(4)(5) | 1 | 10 | 12 | 8 | 10 | 10 | 8.0 |
| 15 | D | CWR16D(1)156(2)(3)D(4)(5) | 1 | 10 | 12 | 8 | 10 | 12 | 5.0 |
| 15 | E | CWR16D(1)156(2)(3)E(4)(5) | 1 | 10 | 12 | 8 | 10 | 12 | 3.0 |
| 22 | D | CWR16D(1)226(2)(3)D(4)(5) | 1 | 10 | 12 | 6 | 8 | 8 | 5.0 |
| 22 | E | CWR16D(1)226(2)(3)E(4)(5) | 2 | 20 | 24 | 8 | 10 | 12 | 3.5 |
| 33 | E | CWR16D(1)336(2)(3)E(4)(5) | 2 | 20 | 24 | 6 | 8 | 8 | 3.5 |
| 47 | F | CWR16D(1)476(2)(3)F(4)(5) | 3 | 30 | 36 | 8 | 10 | 12 | 3.5 |
| 68 | F | CWR16D(1)686(2)(3)F(4)(5) | 4 | 40 | 48 | 10 | 12 | 12 | 1.5 |
| 68 | G | CWR16D(1)686(2)(3)G(4)(5) | 4 | 40 | 48 | 10 | 12 | 12 | 1.0 |
| 100 | G | CWR16D(1)107(2)(3)G(4)(5) | 6 | 60 | 72 | 10 | 12 | 12 | 1.1 |
| 150 | G | CWR16D(1)157(2)(3)G(4)(5) | 10 | 100 | 120 | 10 | 12 | 12 | 1.1 |
| 220 | H | CWR16D(1)227(2)(3)H(4)(5) | 10 | 100 | 120 | 10 | 12 | 12 | 0.9 |
| 330 | H | CWR16D(1)337(2)(3)H(4)(5) | 20 | 200 | 240 | 10 | 12 | 12 | 0.9 |

**Note**

- Part number definitions:
  (1) Termination finish: B, C, H, K
  (2) Capacitance tolerance: J, K, M
  (3) Failure rate: B, C, T
  (4) Surge current: A, B, C, Z
  (5) Packaging: blank, /FA, /HR, /PR, /TR


For technical questions, contact: tantalum@vishay.com
THIS DOCUMENT IS SUBJECT TO CHANGE WITHOUT NOTICE. THE PRODUCTS DESCRIBED HEREIN AND THIS DOCUMENT ARE SUBJECT TO SPECIFIC DISCLAIMERS, SET FORTH AT www.vishay.com/doc?91000

## STANDARD RATINGS

| CAPACITANCE (µF) | CASE CODE | PART NUMBER | MAX. DCL (µA) AT +25 °C | MAX. DCL (µA) AT +85 °C | MAX. DCL (µA) AT +125 °C | MAX. DF (%) AT +25 °C | MAX. DF (%) AT +85 °C +125 °C | MAX. DF (%) AT -55 °C | MAX. ESR AT +25 °C 100 kHz (Ω) |
|---|---|---|---|---|---|---|---|---|---|
| **10 $V_{DC}$ AT +85 °C; 7 $V_{DC}$ AT +125 °C** | | | | | | | | | |
| 2.2 | A | CWR16F(1)225(2)(3)A(4)(5) | 1 | 10 | 12 | 6 | 8 | 8 | 12.0 |
| 3.3 | A | CWR16F(1)335(2)(3)A(4)(5) | 1 | 10 | 12 | 6 | 8 | 8 | 12.0 |
| 4.7 | B | CWR16F(1)475(2)(3)B(4)(5) | 1 | 10 | 12 | 6 | 8 | 8 | 8.0 |
| 4.7 | C | CWR16F(1)475(2)(3)C(4)(5) | 1 | 10 | 12 | 6 | 8 | 8 | 5.5 |
| 6.8 | B | CWR16F(1)685(2)(3)B(4)(5) | 1 | 10 | 12 | 6 | 8 | 8 | 8.0 |
| 6.8 | C | CWR16F(1)685(2)(3)C(4)(5) | 1 | 10 | 12 | 6 | 8 | 8 | 5.5 |
| 6.8 | D | CWR16F(1)685(2)(3)D(4)(5) | 1 | 10 | 12 | 6 | 8 | 8 | 5.0 |
| 10 | B | CWR16F(1)106(2)(3)B(4)(5) | 1 | 10 | 12 | 8 | 10 | 10 | 8.0 |
| 10 | C | CWR16F(1)106(2)(3)C(4)(5) | 1 | 10 | 12 | 6 | 8 | 8 | 5.5 |
| 10 | D | CWR16F(1)106(2)(3)D(4)(5) | 1 | 10 | 12 | 6 | 8 | 8 | 4.0 |
| 10 | E | CWR16F(1)106(2)(3)E(4)(5) | 1 | 10 | 12 | 6 | 8 | 8 | 3.5 |
| 15 | D | CWR16F(1)156(2)(3)D(4)(5) | 1 | 10 | 12 | 6 | 8 | 8 | 5.0 |
| 15 | E | CWR16F(1)156(2)(3)E(4)(5) | 2 | 20 | 24 | 8 | 10 | 10 | 3.0 |
| 22 | E | CWR16F(1)226(2)(3)E(4)(5) | 3 | 30 | 36 | 8 | 10 | 10 | 2.0 |
| 33 | F | CWR16F(1)336(2)(3)F(4)(5) | 3 | 30 | 36 | 8 | 10 | 10 | 1.5 |
| 47 | F | CWR16F(1)476(2)(3)F(4)(5) | 4 | 40 | 48 | 10 | 12 | 12 | 1.5 |
| 47 | G | CWR16F(1)476(2)(3)G(4)(5) | 4 | 40 | 48 | 10 | 12 | 12 | 1.0 |
| 68 | G | CWR16F(1)686(2)(3)G(4)(5) | 6 | 60 | 72 | 10 | 12 | 12 | 1.1 |
| 100 | G | CWR16F(1)107(2)(3)G(4)(5) | 10 | 100 | 120 | 10 | 12 | 12 | 1.1 |
| 100 | H | CWR16F(1)107(2)(3)H(4)(5) | 10 | 100 | 120 | 10 | 12 | 12 | 0.9 |
| 150 | H | CWR16F(1)157(2)(3)H(4)(5) | 15 | 150 | 180 | 10 | 12 | 12 | 0.9 |
| 220 | H | CWR16F(1)227(2)(3)H(4)(5) | 20 | 200 | 240 | 10 | 12 | 12 | 0.9 |
| **15 $V_{DC}$ AT +85 °C; 10 $V_{DC}$ AT +125 °C** | | | | | | | | | |
| 1.0 | A | CWR16H(1)105(2)(3)A(4)(5) | 1 | 10 | 12 | 6 | 8 | 8 | 15.0 |
| 1.5 | A | CWR16H(1)155(2)(3)A(4)(5) | 1 | 10 | 12 | 6 | 8 | 8 | 15.0 |
| 2.2 | A | CWR16H(1)225(2)(3)A(4)(5) | 1 | 10 | 12 | 6 | 8 | 8 | 15.0 |
| 3.3 | B | CWR16H(1)335(2)(3)B(4)(5) | 1 | 10 | 12 | 6 | 8 | 8 | 9.0 |
| 4.7 | B | CWR16H(1)475(2)(3)B(4)(5) | 1 | 10 | 12 | 6 | 8 | 8 | 5.0 |
| 4.7 | C | CWR16H(1)475(2)(3)C(4)(5) | 1 | 10 | 12 | 6 | 8 | 8 | 5.5 |
| 4.7 | D | CWR16H(1)475(2)(3)D(4)(5) | 1 | 10 | 12 | 6 | 8 | 8 | 6.0 |
| 6.8 | D | CWR16H(1)685(2)(3)D(4)(5) | 1 | 10 | 12 | 6 | 8 | 8 | 6.0 |
| 6.8 | E | CWR16H(1)685(2)(3)E(4)(5) | 1 | 10 | 12 | 8 | 10 | 12 | 3.0 |
| 10 | D | CWR16H(1)106(2)(3)D(4)(5) | 2 | 20 | 24 | 6 | 8 | 8 | 6.0 |
| 10 | E | CWR16H(1)106(2)(3)E(4)(5) | 2 | 20 | 24 | 6 | 8 | 8 | 4.0 |
| 15 | E | CWR16H(1)156(2)(3)E(4)(5) | 2 | 20 | 24 | 6 | 8 | 8 | 4.0 |
| 15 | F | CWR16H(1)156(2)(3)F(4)(5) | 2 | 20 | 24 | 8 | 10 | 10 | 3.0 |
| 22 | F | CWR16H(1)226(2)(3)F(4)(5) | 3 | 30 | 36 | 8 | 10 | 10 | 3.0 |
| 33 | F | CWR16H(1)336(2)(3)F(4)(5) | 5 | 50 | 60 | 6 | 8 | 8 | 3.0 |
| 33 | G | CWR16H(1)336(2)(3)G(4)(5) | 6 | 60 | 72 | 8 | 10 | 10 | 1.1 |
| 47 | G | CWR16H(1)476(2)(3)G(4)(5) | 10 | 100 | 120 | 8 | 10 | 10 | 1.1 |
| 47 | H | CWR16H(1)476(2)(3)H(4)(5) | 10 | 100 | 120 | 8 | 10 | 10 | 0.9 |
| 68 | G | CWR16H(1)686(2)(3)G(4)(5) | 10 | 100 | 120 | 8 | 10 | 10 | 1.1 |
| 68 | H | CWR16H(1)686(2)(3)H(4)(5) | 10 | 100 | 120 | 8 | 10 | 10 | 0.9 |
| 100 | H | CWR16H(1)107(2)(3)H(4)(5) | 15 | 150 | 180 | 10 | 12 | 12 | 0.9 |

**Note**

- Part number definitions:
  (1) Termination finish: B, C, H, K
  (2) Capacitance tolerance: J, K, M
  (3) Failure rate: B, C, T
  (4) Surge current: A, B, C, Z
  (5) Packaging: blank, /FA, /HR, /PR, /TR


For technical questions, contact: tantalum@vishay.com
THIS DOCUMENT IS SUBJECT TO CHANGE WITHOUT NOTICE. THE PRODUCTS DESCRIBED HEREIN AND THIS DOCUMENT ARE SUBJECT TO SPECIFIC DISCLAIMERS, SET FORTH AT www.vishay.com/doc?91000

## STANDARD RATINGS

| CAPACITANCE (µF) | CASE CODE | PART NUMBER | MAX. DCL (µA) AT | | | MAX. DF (%) AT | | | MAX. ESR AT +25 °C 100 kHz (Ω) |
|---|---|---|---|---|---|---|---|---|---|
| | | | +25 °C | +85 °C | +125 °C | +25 °C | +85 °C +125 °C | -55 °C | |
| **20 $V_{DC}$ AT +85 °C; 13 $V_{DC}$ AT +125 °C** | | | | | | | | | |
| 0.68 | A | CWR16J(1)684(2)(3)A(4)(5) | 1 | 10 | 12 | 6 | 8 | 8 | 15.0 |
| 1.0 | A | CWR16J(1)105(2)(3)A(4)(5) | 1 | 10 | 12 | 6 | 8 | 8 | 15.0 |
| 1.5 | B | CWR16J(1)155(2)(3)B(4)(5) | 1 | 10 | 12 | 6 | 8 | 8 | 9.0 |
| 2.2 | B | CWR16J(1)225(2)(3)B(4)(5) | 1 | 10 | 12 | 6 | 8 | 8 | 9.0 |
| 3.3 | D | CWR16J(1)335(2)(3)D(4)(5) | 1 | 10 | 12 | 6 | 8 | 8 | 6.0 |
| 4.7 | E | CWR16J(1)475(2)(3)E(4)(5) | 1 | 10 | 12 | 6 | 8 | 8 | 6.0 |
| 6.8 | E | CWR16J(1)685(2)(3)E(4)(5) | 2 | 20 | 24 | 6 | 8 | 8 | 5.0 |
| 10 | F | CWR16J(1)106(2)(3)F(4)(5) | 2 | 20 | 24 | 6 | 8 | 8 | 3.0 |
| 15 | F | CWR16J(1)156(2)(3)F(4)(5) | 3 | 30 | 36 | 6 | 8 | 8 | 3.0 |
| 22 | G | CWR16J(1)226(2)(3)G(4)(5) | 4 | 40 | 48 | 8 | 10 | 10 | 2.5 |
| 33 | H | CWR16J(1)336(2)(3)H(4)(5) | 6 | 60 | 72 | 8 | 10 | 10 | 0.9 |
| 47 | H | CWR16J(1)476(2)(3)H(4)(5) | 10 | 100 | 120 | 8 | 10 | 10 | 0.9 |
| **25 $V_{DC}$ AT +85 °C; 17 $V_{DC}$ AT +125 °C** | | | | | | | | | |
| 0.47 | A | CWR16K(1)474(2)(3)A(4)(5) | 1 | 10 | 12 | 6 | 8 | 8 | 15.0 |
| 1.0 | B | CWR16K(1)105(2)(3)B(4)(5) | 1 | 10 | 12 | 6 | 8 | 8 | 10.0 |
| 2.2 | D | CWR16K(1)225(2)(3)D(4)(5) | 1 | 10 | 12 | 6 | 8 | 8 | 6.0 |
| 3.3 | E | CWR16K(1)335(2)(3)E(4)(5) | 1 | 10 | 12 | 6 | 8 | 8 | 4.0 |
| 6.8 | F | CWR16K(1)685(2)(3)F(4)(5) | 2 | 20 | 24 | 6 | 8 | 8 | 3.0 |
| 15 | G | CWR16K(1)156(2)(3)G(4)(5) | 4 | 40 | 48 | 6 | 8 | 8 | 1.4 |
| 22 | G | CWR16K(1)226(2)(3)G(4)(5) | 6 | 60 | 72 | 6 | 8 | 8 | 1.4 |
| 22 | H | CWR16K(1)226(2)(3)H(4)(5) | 6 | 60 | 72 | 6 | 8 | 8 | 0.9 |
| 33 | H | CWR16K(1)336(2)(3)H(4)(5) | 10 | 100 | 120 | 8 | 10 | 10 | 0.9 |
| **35 $V_{DC}$ AT +85 °C, 23 $V_{DC}$ AT +125 °C** | | | | | | | | | |
| 0.33 | A | CWR16M(1)334(2)(3)A(4)(5) | 1 | 10 | 12 | 6 | 8 | 8 | 22.0 |
| 6.8 | G | CWR16M(1)685(2)(3)G(4)(5) | 3 | 30 | 36 | 6 | 8 | 8 | 1.5 |
| 10 | H | CWR16M(1)106(2)(3)H(4)(5) | 4 | 40 | 48 | 8 | 10 | 10 | 0.9 |
| 15 | H | CWR16M(1)156(2)(3)H(4)(5) | 6 | 60 | 72 | 6 | 8 | 8 | 0.9 |

**Note**

- Part number definitions:
  (1) Termination finish: B, C, H, K
  (2) Capacitance tolerance: J, K, M
  (3) Failure rate: B, C, T
  (4) Surge current: A, B, C, Z
  (5) Packaging: blank, /FA, /HR, /PR, /TR


For technical questions, contact: tantalum@vishay.com
THIS DOCUMENT IS SUBJECT TO CHANGE WITHOUT NOTICE. THE PRODUCTS DESCRIBED HEREIN AND THIS DOCUMENT ARE SUBJECT TO SPECIFIC DISCLAIMERS, SET FORTH AT www.vishay.com/doc?91000

## TAPE AND REEL PACKAGING in inches [millimeters]

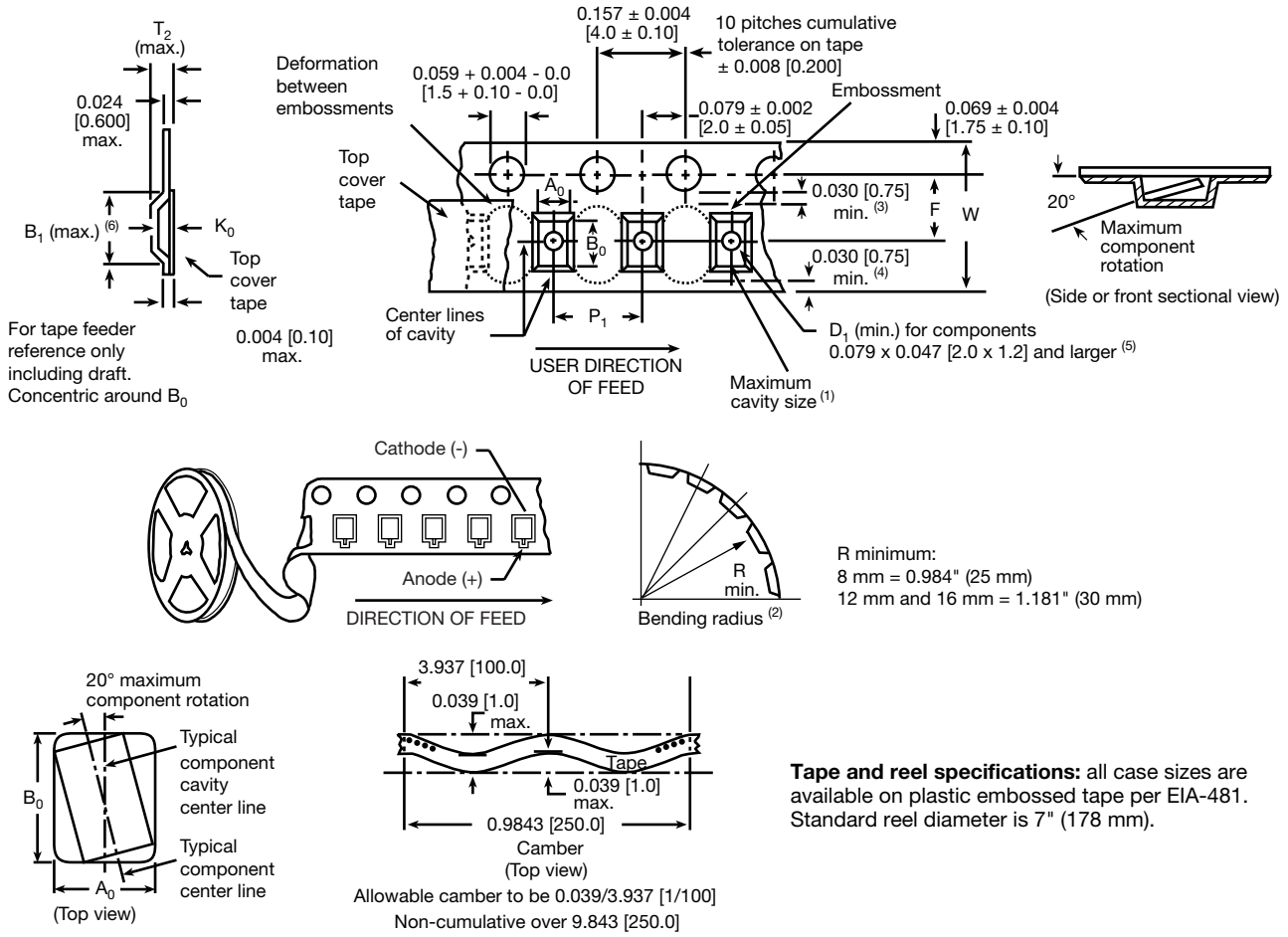


**Tape and reel specifications:** all case sizes are available on plastic embossed tape per EIA-481. Standard reel diameter is 7" (178 mm).

**Notes**

- Metric dimensions will govern. Dimensions in inches are rounded and for reference only

(1) $A_0$, $B_0$, $K_0$, are determined by the maximum dimensions to the ends of the terminals extending from the component body and / or the body dimensions of the component. The clearance between the ends of the terminals or body of the component to the sides and depth of the cavity ($A_0$, $B_0$, $K_0$) must be within 0.002" (0.05 mm) minimum and 0.020" (0.50 mm) maximum. The clearance allowed must also prevent rotation of the component within the cavity of not more than 20°

(2) Tape with components shall pass around radius "R" without damage. The minimum trailer length may require additional length to provide "R" minimum for 12 mm embossed tape for reels with hub diameters approaching N minimum

(3) This dimension is the flat area from the edge of the sprocket hole to either outward deformation of the carrier tape between the embossed cavities or to the edge of the cavity whichever is less

(4) This dimension is the flat area from the edge of the carrier tape opposite the sprocket holes to either the outward deformation of the carrier tape between the embossed cavity or to the edge of the cavity whichever is less

(5) The embossed hole location shall be measured from the sprocket hole controlling the location of the embossment. Dimensions of embossment location shall be applied independent of each other

(6) $B_1$ dimension is a reference dimension tape feeder clearance only

## CARRIER TAPE DIMENSIONS in inches [millimeters]

| CASE CODE | TAPE SIZE | $B_1$ (max.) | $D_1$ (min.) | F | $P_1$ | $T_2$ (max.) | W |
|---|---|---|---|---|---|---|---|
| A | 8 mm | 0.179 [4.55] | 0.039 [1.0] | 0.138 ± 0.002 [3.5 ± 0.05] | 0.157 ± 0.004 [4.0 ± 0.1] | 0.098 [2.5] | 0.315 ± 0.004 [8.0 ± 0.10] |
| B, C, D, E | 12 mm | 0.323 [8.2] | 0.059 [1.5] | 0.217 ± 0.002 [5.5 ± 0.05] | 0.157 ± 0.004 [4.0 ± 0.1] | 0.256 [6.5] | 0.472 ± 0.012 [12.0 ± 0.30] |
| F | 12 mm double pitch | 0.323 [8.2] | 0.059 [1.5] | 0.217 ± 0.002 [5.5 ± 0.05] | 0.315 ± 0.004 [8.0 ± 0.10] | 0.256 [6.5] | 0.472 ± 0.012 [12.0 ± 0.30] |
| G, H | 16 mm | 0.476 [12.1] | 0.059 [1.5] | 0.295 ± 0.004 [7.5 ± 0.1] | 0.315 ± 0.004 [8.0 ± 0.10] | 0.315 [8.0] | 0.642 max. [16.3] max. |


For technical questions, contact: tantalum@vishay.com
THIS DOCUMENT IS SUBJECT TO CHANGE WITHOUT NOTICE. THE PRODUCTS DESCRIBED HEREIN AND THIS DOCUMENT ARE SUBJECT TO SPECIFIC DISCLAIMERS, SET FORTH AT www.vishay.com/doc?91000

## STANDARD PACKAGING QUANTITY

| CASE CODE | QUANTITY (PCS/REEL) | | | BULK, PLASTIC TRAY QUANTITY (PCS) |
|---|---|---|---|---|
| | 7", FULL REEL (/TR) | 7", HALF REEL (/HR) | 7", PARTIAL REEL (/PR) | |
| A, B, C, D, E | 2500 | 1250 | 100 | 75 |
| F | 1000 | 500 | 100 | 75 |
| G | 600 | 300 | 100 | 60 |
| H | 600 | 300 | 100 | 50 |

**Notes**
- Bulk capacitors are shipped in plastic trays
- T level capacitors are only shipped in tape and reel / or waffle packaging. Contact factory for waffle pack quantities

## PAD DIMENSIONS in inches [millimeters]

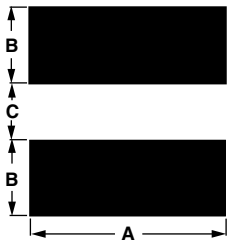


| CASE CODE | WIDTH (A) | PAD METALLIZATION (B) | SEPARATION (C) |
|---|---|---|---|
| A | 0.065 [1.6] | 0.050 [1.3] | 0.040 [1.0] |
| B | 0.065 [1.6] | 0.070 [1.8] | 0.055 [1.4] |
| C | 0.065 [1.6] | 0.070 [1.8] | 0.120 [3.0] |
| D | 0.115 [2.9] | 0.070 [1.8] | 0.070 [1.8] |
| E | 0.115 [2.9] | 0.070 [1.8] | 0.120 [3.0] |
| F | 0.150 [3.8] | 0.070 [1.8] | 0.140 [3.6] |
| G | 0.125 [3.2] | 0.070 [1.8] | 0.170 [4.3] |
| H | 0.165 [4.2] | 0.090 [2.3] | 0.170 [4.3] |

## POWER DISSIPATION

| CASE CODE | MAXIMUM PERMISSIBLE POWER DISSIPATION AT +25 °C (W) IN FREE AIR |
|---|---|
| A | 0.060 |
| B, C | 0.075 |
| D, E | 0.085 |
| F | 0.110 |
| G | 0.120 |
| H | 0.150 |

| PRODUCT INFORMATION | |
|---|---|
| Conformal Coated Guide | www.vishay.com/doc?40150 |
| Pad Dimensions | |
| Packaging Dimensions | |
| Moisture Sensitivity (MSL) | www.vishay.com/doc?40135 |
| **SELECTOR GUIDES** | |
| Solid Tantalum Selector Guide | www.vishay.com/doc?49053 |
| Solid Tantalum Chip Capacitors | www.vishay.com/doc?40091 |
| **FAQ** | |
| Frequently Asked Questions | www.vishay.com/doc?40110 |


For technical questions, contact: tantalum@vishay.com
THIS DOCUMENT IS SUBJECT TO CHANGE WITHOUT NOTICE. THE PRODUCTS DESCRIBED HEREIN AND THIS DOCUMENT ARE SUBJECT TO SPECIFIC DISCLAIMERS, SET FORTH AT www.vishay.com/doc?91000

# Guide for Conformal Coated Tantalum Capacitors

## INTRODUCTION

Tantalum electrolytic capacitors are the preferred choice in applications where volumetric efficiency, stable electrical parameters, high reliability, and long service life are primary considerations. The stability and resistance to elevated temperatures of the tantalum / tantalum oxide / manganese dioxide system make solid tantalum capacitors an appropriate choice for today's surface mount assembly technology.

Vishay Sprague has been a pioneer and leader in this field, producing a large variety of tantalum capacitor types for consumer, industrial, automotive, military, and aerospace electronic applications.

Tantalum is not found in its pure state. Rather, it is commonly found in a number of oxide minerals, often in combination with Columbium ore. This combination is known as “tantalite” when its contents are more than one-half tantalum. Important sources of tantalite include Australia, Brazil, Canada, China, and several African countries. Synthetic tantalite concentrates produced from tin slags in Thailand, Malaysia, and Brazil are also a significant raw material for tantalum production.

Electronic applications, and particularly capacitors, consume the largest share of world tantalum production. Other important applications for tantalum include cutting tools (tantalum carbide), high temperature super alloys, chemical processing equipment, medical implants, and military ordnance.

Vishay Sprague is a major user of tantalum materials in the form of powder and wire for capacitor elements and rod and sheet for high temperature vacuum processing.

## THE BASICS OF TANTALUM CAPACITORS

Most metals form crystalline oxides which are non-protecting, such as rust on iron or black oxide on copper. A few metals form dense, stable, tightly adhering, electrically insulating oxides. These are the so-called “valve” metals and include titanium, zirconium, niobium, tantalum, hafnium, and aluminum. Only a few of these permit the accurate control of oxide thickness by electrochemical means. Of these, the most valuable for the electronics industry are aluminum and tantalum.

Capacitors are basic to all kinds of electrical equipment, from radios and television sets to missile controls and automobile ignitions. Their function is to store an electrical charge for later use.

Capacitors consist of two conducting surfaces, usually metal plates, whose function is to conduct electricity. They are separated by an insulating material or dielectric. The dielectric used in all tantalum electrolytic capacitors is tantalum pentoxide.

Tantalum pentoxide compound possesses high-dielectric strength and a high-dielectric constant. As capacitors are being manufactured, a film of tantalum pentoxide is applied to their electrodes by means of an electrolytic process. The film is applied in various thicknesses and at various voltages and although transparent to begin with, it takes on different colors as light refracts through it. This coloring occurs on the tantalum electrodes of all types of tantalum capacitors.

Rating for rating, tantalum capacitors tend to have as much as three times better capacitance / volume efficiency than aluminum electrolytic capacitors. An approximation of the capacitance / volume efficiency of other types of capacitors may be inferred from the following table, which shows the dielectric constant ranges of the various materials used in each type. Note that tantalum pentoxide has a dielectric constant of 26, some three times greater than that of aluminum oxide. This, in addition to the fact that extremely thin films can be deposited during the electrolytic process mentioned earlier, makes the tantalum capacitor extremely efficient with respect to the number of microfarads available per unit volume. The capacitance of any capacitor is determined by the surface area of the two conducting plates, the distance between the plates, and the dielectric constant of the insulating material between the plates.

**COMPARISON OF CAPACITOR DIELECTRIC CONSTANTS**

| DIELECTRIC | e<br>DIELECTRIC CONSTANT |
|---|---|
| Air or vacuum | 1.0 |
| Paper | 2.0 to 6.0 |
| Plastic | 2.1 to 6.0 |
| Mineral oil | 2.2 to 2.3 |
| Silicone oil | 2.7 to 2.8 |
| Quartz | 3.8 to 4.4 |
| Glass | 4.8 to 8.0 |
| Porcelain | 5.1 to 5.9 |
| Mica | 5.4 to 8.7 |
| Aluminum oxide | 8.4 |
| **Tantalum pentoxide** | **26** |
| Ceramic | 12 to 400K |

In the tantalum electrolytic capacitor, the distance between the plates is very small since it is only the thickness of the tantalum pentoxide film. As the dielectric constant of the tantalum pentoxide is high, the capacitance of a tantalum capacitor is high if the area of the plates is large:

$$C = \frac{eA}{t}$$

where

C = capacitance
e = dielectric constant
A = surface area of the dielectric
t = thickness of the dielectric

Tantalum capacitors contain either liquid or solid electrolytes. In solid electrolyte capacitors, a dry material (manganese dioxide) forms the cathode plate. A tantalum lead is embedded in or welded to the pellet, which is in turn connected to a termination or lead wire. The drawings show the construction details of the surface mount types of tantalum capacitors shown in this catalog.


For technical questions, contact: tantalum@vishay.com
THIS DOCUMENT IS SUBJECT TO CHANGE WITHOUT NOTICE. THE PRODUCTS DESCRIBED HEREIN AND THIS DOCUMENT ARE SUBJECT TO SPECIFIC DISCLAIMERS, SET FORTH AT www.vishay.com/doc?91000

## SOLID ELECTROLYTE TANTALUM CAPACITORS

Solid electrolyte capacitors contain manganese dioxide, which is formed on the tantalum pentoxide dielectric layer by impregnating the pellet with a solution of manganous nitrate. The pellet is then heated in an oven, and the manganous nitrate is converted to manganese dioxide.

The pellet is next coated with graphite, followed by a layer of metallic silver, which provides a conductive surface between the pellet and the can in which it will be enclosed.

After assembly, the capacitors are tested and inspected to assure long life and reliability. It offers excellent reliability and high stability for consumer and commercial electronics with the added feature of low cost.

Surface mount designs of “Solid Tantalum” capacitors use lead frames or lead frameless designs as shown in the accompanying drawings.

## TANTALUM CAPACITORS FOR ALL DESIGN CONSIDERATIONS

Solid electrolyte designs are the least expensive for a given rating and are used in many applications where their very small size for a given unit of capacitance is of importance. They will typically withstand up to about 10 % of the rated DC working voltage in a reverse direction. Also important are their good low temperature performance characteristics and freedom from corrosive electrolytes.

Vishay Sprague patented the original solid electrolyte capacitors and was the first to market them in 1956. Vishay Sprague has the broadest line of tantalum capacitors and has continued its position of leadership in this field. Data sheets covering the various types and styles of Vishay Sprague capacitors for consumer and entertainment electronics, industry, and military applications are available where detailed performance characteristics must be specified.

### TYPE 195D, 591D, 592D / 592W, 594D, 595D, 695D, T95, 14002

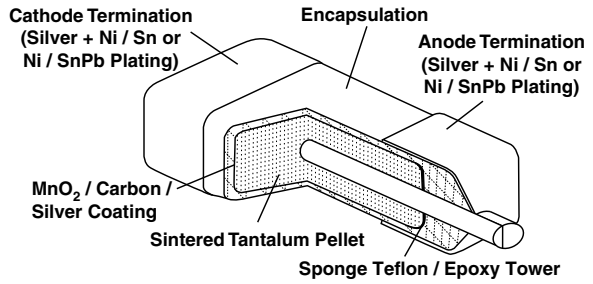


### TYPE 597D / T97 / 13008

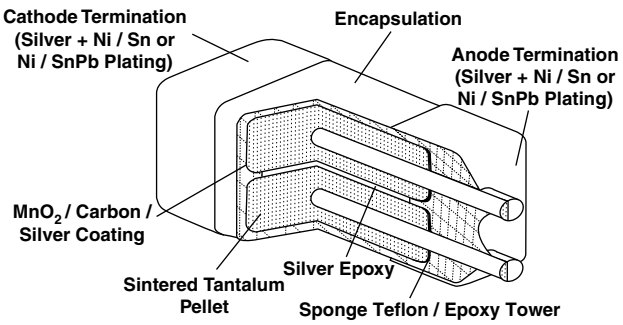


### TYPE 194D

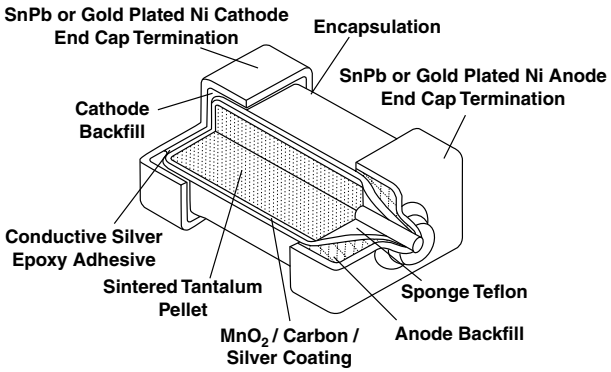


### TYPE T96

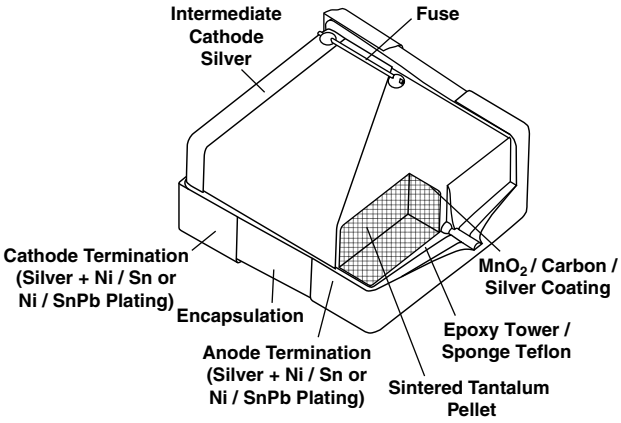


### TYPE T98

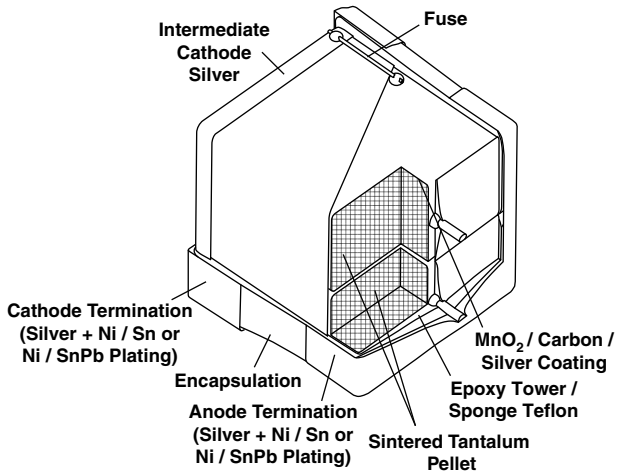


**Note**

- For all types of conformal coated capacitors, tantalum wire to tantalum pellet attachment method could be either embedded (see images on the left side of the page) or welded (see images on the right side), depending on specific rating


For technical questions, contact: tantalum@vishay.com
THIS DOCUMENT IS SUBJECT TO CHANGE WITHOUT NOTICE. THE PRODUCTS DESCRIBED HEREIN AND THIS DOCUMENT ARE SUBJECT TO SPECIFIC DISCLAIMERS, SET FORTH AT www.vishay.com/doc?91000

## COMMERCIAL PRODUCTS

| SOLID TANTALUM CAPACITORS - CONFORMAL COATED | | | | | |
|---|---|---|---|---|---|
| **SERIES** | **592W** | **592D** | **591D** | **595D** | **594D** |
| **PRODUCT IMAGE** | | | | | |
| **TYPE** | Surface mount TANTAMOUNT™ chip, conformal coated | | | | |
| **FEATURES** | Low profile, robust design for use in pulsed applications | Low profile, maximum CV | Low profile, low ESR, maximum CV | Maximum CV | Low ESR, maximum CV |
| **TEMPERATURE RANGE** | -55 °C to +125 °C (above 40 °C, voltage deratig is required) | -55 °C to +125 °C (above 85 °C, voltage derating is required) | | | |
| **CAPACITANCE RANGE** | 330 µF to 2200 µF | 1 µF to 2200 µF | 1 µF to 1500 µF | 0.1 µF to 1500 µF | 1 µF to 1500 µF |
| **VOLTAGE RANGE** | 6 V to 10 V | 4 V to 50 V | 4 V to 50 V | 4 V to 50 V | 4 V to 50 V |
| **CAPACITANCE TOLERANCE** | ± 20 % | ± 10 %, ± 20 % | ± 10 %, ± 20 % | ± 10 %, ± 20 % | ± 10 %, ± 20 % |
| **LEAKAGE CURRENT** | | 0.01 CV or 0.5 µA, whichever is greater | | | |
| **DISSIPATION FACTOR** | 14 % to 45 % | 4 % to 50 % | 4 % to 50 % | 4 % to 20 % | 4 % to 20 % |
| **CASE CODES** | C, M, X | S, A, B, C, D, R, M, X | A, B, C, D, R, M | T, S, A, B, C, D, G, M, R | B, C, D, R |
| **TERMINATION** | 100 % matte tin | 100 % matte tin standard, tin / lead and gold plated available | | | |

| SOLID TANTALUM CAPACITORS - CONFORMAL COATED | | | | |
|---|---|---|---|---|
| **SERIES** | **597D** | **695D** | **195D** | **194D** |
| **PRODUCT IMAGE** | | | | |
| **TYPE** | TANTAMOUNT™ chip, conformal coated | | | |
| **FEATURES** | Ultra low ESR, maximum CV, multi-anode | Pad compatible with 194D and CWR06 | US and European case sizes | Industrial version of CWR06 / CWR16 |
| **TEMPERATURE RANGE** | -55 °C to +125 °C (above 85 °C, voltage derating is required) | | | |
| **CAPACITANCE RANGE** | 10 µF to 2200 µF | 0.1 µF to 270 µF | 0.1 µF to 330 µF | 0.1 µF to 330 µF |
| **VOLTAGE RANGE** | 4 V to 75 V | 4 V to 50 V | 2 V to 50 V | 4 V to 50 V |
| **CAPACITANCE TOLERANCE** | ± 10 %, ± 20 % | | | |
| **LEAKAGE CURRENT** | 0.01 CV or 0.5 µA, whichever is greater | | | |
| **DISSIPATION FACTOR** | 6 % to 20 % | 4 % to 8 % | 4 % to 8 % | 4 % to 10 % |
| **CASE CODES** | V, D, E, R, F, Z, M, H | A, B, D, E, F, G, H | C, S, V, X, Y, Z, R, A, B, D, E, F, G, H | A, B, C, D, E, F, G, H |
| **TERMINATION** | 100 % matte tin standard, tin / lead solder plated available | 100 % matte tin standard, tin / lead and gold plated available | | Gold plated standard; tin / lead solder plated and hot solder dipped available |


For technical questions, contact: tantalum@vishay.com
THIS DOCUMENT IS SUBJECT TO CHANGE WITHOUT NOTICE. THE PRODUCTS DESCRIBED HEREIN AND THIS DOCUMENT ARE SUBJECT TO SPECIFIC DISCLAIMERS, SET FORTH AT www.vishay.com/doc?91000

## HIGH RELIABILITY PRODUCTS

| SOLID TANTALUM CAPACITORS - CONFORMAL COATED | | | | | |
|---|---|---|---|---|---|
| **SERIES** | **CWR06** | **CWR16** | **CWR26** | **13008** | **14002** |
| **PRODUCT IMAGE** | | | | | |
| **TYPE** | TANTAMOUNT™ chip, conformal coated | | | | |
| **FEATURES** | MIL-PRF-55365/4 qualified | MIL-PRF-55365/13 qualified | MIL-PRF-55365/13 qualified | DLA approved | |
| **TEMPERATURE RANGE** | -55 °C to +125 °C (above 85 °C, voltage derating is required) | | | | |
| **CAPACITANCE RANGE** | 0.10 µF to 100 µF | 0.33 µF to 330 µF | 10 µF to 100 µF | 10 µF to 1500 µF | 4.7 µF to 680 µF |
| **VOLTAGE RANGE** | 4 V to 50 V | 4 V to 35 V | 15 V to 35 V | 4 V to 63 V | 4 V to 50 V |
| **CAPACITANCE TOLERANCE** | ± 5 %, ± 10 %, ± 20 % | ± 5 %, ± 10 %, ± 20 % | ± 5 %, ± 10 %, ± 20 % | ± 10 %, ± 20 % | ± 10 %, ± 20 % |
| **LEAKAGE CURRENT** | 0.01 CV or 1.0 µA, whichever is greater | | | 0.01 CV or 0.5 µA, whichever is greater | |
| **DISSIPATION FACTOR** | 6 % to 10 % | 6 % to 10 % | 6 % to 12 % | 6 % to 20 % | 6 % to 14 % |
| **CASE CODES** | A, B, C, D, E, F, G, H | A, B, C, D, E, F, G, H | F, G, H | V, E, F, R, Z, D, M, H, N | B, C, D, R |
| **TERMINATION** | Gold plated; tin / lead; tin / lead solder fused | | | Tin / lead | |

| SOLID TANTALUM CAPACITORS - CONFORMAL COATED | | | | |
|---|---|---|---|---|
| **SERIES** | **T95** | **T96** | **T97** | **T98** |
| **PRODUCT IMAGE** | | | | |
| **TYPE** | TANTAMOUNT™ chip, Hi-Rel COTS, conformal coated | | | |
| **FEATURES** | High reliability | High reliability, built in fuse | High reliability, ultra low ESR, multi-anode | High reliability, ultra low ESR, built in fuse, multi-anode |
| **TEMPERATURE RANGE** | -55 °C to +125 °C (above 85 °C, voltage derating is required) | | | |
| **CAPACITANCE RANGE** | 0.15 µF to 680 µF | 10 µF to 680 µF | 10 µF to 2200 µF | 10 µF to 1500 µF |
| **VOLTAGE RANGE** | 4 V to 50 V | 4 V to 50 V | 4 V to 75 V | 4 V to 75 V |
| **CAPACITANCE TOLERANCE** | ± 10 %, ± 20 % | ± 10 %, ± 20 % | ± 10 %, ± 20 % | ± 10 %, ± 20 % |
| **LEAKAGE CURRENT** | 0.01 CV or 0.5 µA, whichever is greater | | | |
| **DISSIPATION FACTOR** | 4 % to 14 % | 6 % to 14 % | 6 % to 20 % | 6 % to 10 % |
| **CASE CODES** | A, B, C, D, R, S, V, X, Y, Z | R | V, E, F, R, Z, D, M, H, N | V, E, F, R, Z, M, H |
| **TERMINATION** | 100 % matte tin, tin / lead | | | |


For technical questions, contact: tantalum@vishay.com
THIS DOCUMENT IS SUBJECT TO CHANGE WITHOUT NOTICE. THE PRODUCTS DESCRIBED HEREIN AND THIS DOCUMENT ARE SUBJECT TO SPECIFIC DISCLAIMERS, SET FORTH AT www.vishay.com/doc?91000

## TAPE AND REEL PACKAGING in inches [millimeters]

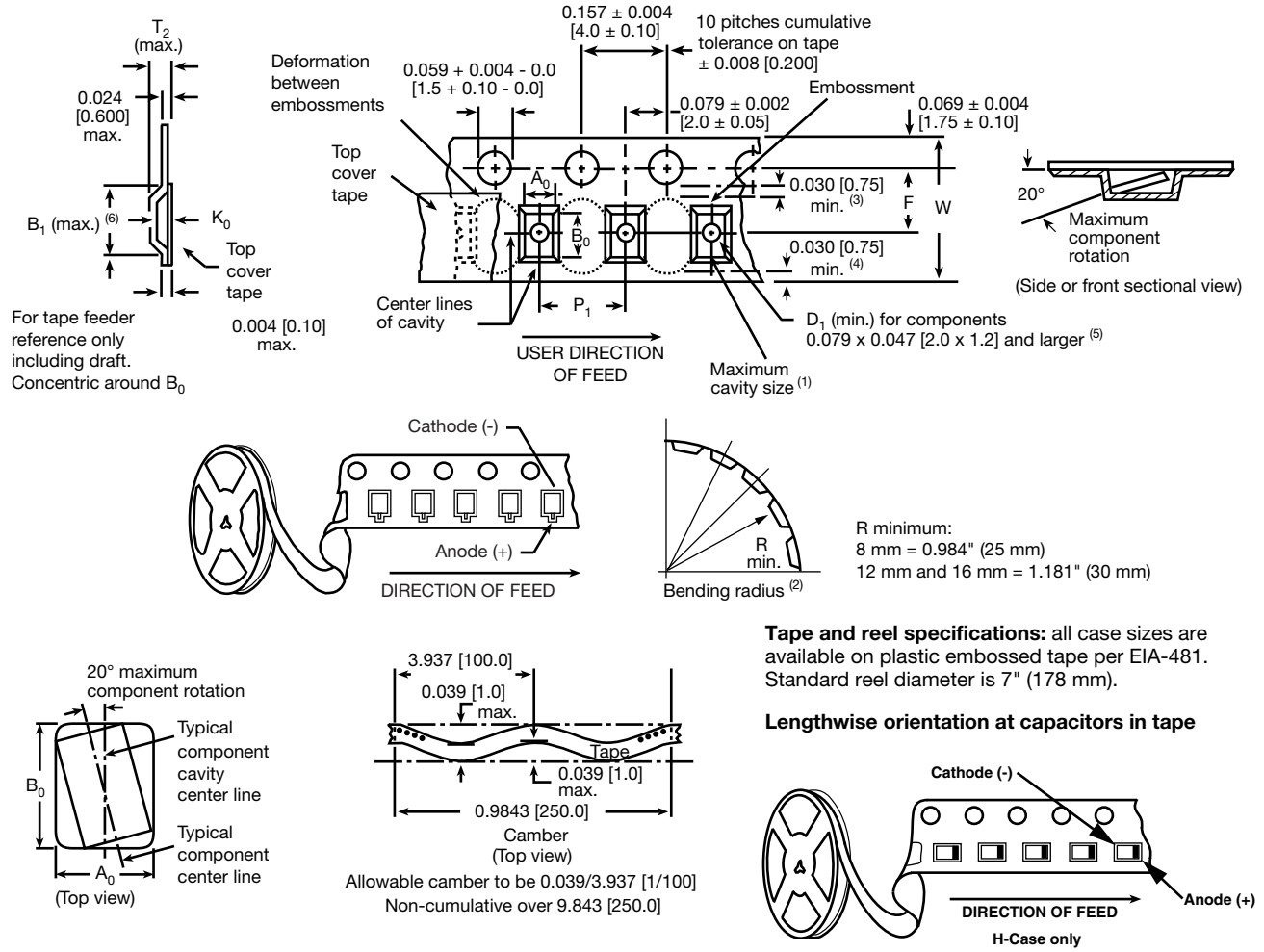


**Tape and reel specifications:** all case sizes are available on plastic embossed tape per EIA-481. Standard reel diameter is 7" (178 mm).

**Lengthwise orientation at capacitors in tape**

**Notes**

- Metric dimensions will govern. Dimensions in inches are rounded and for reference only

(1) $A_0$, $B_0$, $K_0$, are determined by the maximum dimensions to the ends of the terminals extending from the component body and / or the body dimensions of the component. The clearance between the ends of the terminals or body of the component to the sides and depth of the cavity ($A_0$, $B_0$, $K_0$) must be within 0.002" (0.05 mm) minimum and 0.020" (0.50 mm) maximum. The clearance allowed must also prevent rotation of the component within the cavity of not more than 20°

(2) Tape with components shall pass around radius “R” without damage. The minimum trailer length may require additional length to provide “R” minimum for 12 mm embossed tape for reels with hub diameters approaching N minimum

(3) This dimension is the flat area from the edge of the sprocket hole to either outward deformation of the carrier tape between the embossed cavities or to the edge of the cavity whichever is less

(4) This dimension is the flat area from the edge of the carrier tape opposite the sprocket holes to either the outward deformation of the carrier tape between the embossed cavity or to the edge of the cavity whichever is less

(5) The embossed hole location shall be measured from the sprocket hole controlling the location of the embossment. Dimensions of embossment location shall be applied independent of each other

(6) $B_1$ dimension is a reference dimension tape feeder clearance only


For technical questions, contact: tantalum@vishay.com
THIS DOCUMENT IS SUBJECT TO CHANGE WITHOUT NOTICE. THE PRODUCTS DESCRIBED HEREIN AND THIS DOCUMENT ARE SUBJECT TO SPECIFIC DISCLAIMERS, SET FORTH AT www.vishay.com/doc?91000

| **CARRIER TAPE DIMENSIONS** in inches [millimeters] | | | | | | |
|---|---|---|---|---|---|---|
| **TAPE WIDTH** | **W** | **$D_0$** | **$P_2$** | **F** | **$E_1$** | **$E_{2\ min.}$** |
| 8 mm | 0.315 + 0.012 / - 0.004 [8.0 + 0.3 / - 0.1] | 0.059 + 0.004 / - 0 [1.5 + 0.1 / - 0] | 0.078 ± 0.0019 [2.0 ± 0.05] | 0.14 ± 0.0019 [3.5 ± 0.05] | 0.324 ± 0.004 [1.75 ± 0.1] | 0.246 [6.25] |
| 12 mm | 0.479 + 0.012 / - 0.004 [12.0 + 0.3 / - 0.1] | | | 0.216 ± 0.0019 [5.5 ± 0.05] | | 0.403 [10.25] |
| 16 mm | 0.635 + 0.012 / - 0.004 [16.0 + 0.3 / - 0.1] | | 0.078 ± 0.004 [2.0 ± 0.1] | 0.295 ± 0.004 [7.5 ± 0.1] | | 0.570 [14.25] |
| 24 mm | 0.945 ± 0.012 [24.0 ± 0.3] | | | 0.453 ± 0.004 [11.5 ± 0.1] | | 0.876 [22.25] |

| **CARRIER TAPE DIMENSIONS** in inches [millimeters] | | | | | |
|---|---|---|---|---|---|
| **TYPE** | **CASE CODE** | **TAPE WIDTH W IN mm** | **$P_1$** | **$K_{0\ max.}$** | **$B_{1\ max.}$** |
| 592D 592W 591D | A | 8 | 0.157 ± 0.004 [4.0 ± 0.10] | 0.058 [1.47] | 0.149 [3.78] |
| | B | 12 | | 0.088 [2.23] | 0.166 [4.21] |
| | C | 12 | 0.315 ± 0.004 [8.0 ± 0.10] | 0.088 [2.23] | 0.290 [7.36] |
| | D | 12 | | 0.088 [2.23] | 0.300 [7.62] |
| | M | 16 | | 0.091 [2.30] | 0.311 [7.90] |
| | R | 12 | | 0.088 [2.23] | 0.296 [7.52] |
| | S | 8 | 0.157 ± 0.004 [4.0 ± 0.10] | 0.058 [1.47] | 0.139 [3.53] |
| | T | 12 | | 0.088 [2.23] | 0.166 [4.21] |
| | X | 24 | 0.472 ± 0.004 [12.0 ± 0.10] | 0.011 [2.72] | 0.594 [15.1] |
| 595D 594D | A | 8 | 0.157 ± 0.004 [4.0 ± 0.10] | 0.063 [1.60] | 0.152 [3.86] |
| | B | 12 | | 0.088 [2.23] | 0.166 [4.21] |
| | C | 12 | 0.315 ± 0.004 [8.0 ± 0.10] | 0.118 [2.97] | 0.290 [7.36] |
| | D | 12 | | 0.119 [3.02] | 0.296 [7.52] |
| | G | 12 | | 0.111 [2.83] | 0.234 [5.95] |
| | H | 12 | | 0.098 [2.50] | 0.232 [5.90] |
| | M | 12 | 0.157 ± 0.004 [4.0 ± 0.10] | 0.085 [2.15] | 0.152 [3.85] |
| | R | 12 | 0.315 ± 0.004 [8.0 ± 0.10] | 0.148 [3.78] | 0.296 [7.52] |
| | S | 8 | 0.157 ± 0.004 [4.0 ± 0.10] | 0.058 [1.47] | 0.149 [3.78] |
| | T | 8 | | 0.054 [1.37] | 0.093 [2.36] |
| 695D | A | 8 | 0.157 ± 0.004 [4.0 ± 0.10] | 0.058 [1.47] | 0.139 [3.53] |
| | B | 12 | | 0.059 [1.50] | 0.189 [4.80] |
| | D | 12 | | 0.063 [1.62] | 0.191 [4.85] |
| | E | 12 | | 0.074 [1.88] | 0.239 [6.07] |
| | F | 12 | 0.315 ± 0.004 [8.0 ± 0.10] | 0.075 [1.93] | 0.259 [6.58] |
| | G | 12 | 0.157 ± 0.004 [4.0 ± 0.10] | 0.109 [2.77] | 0.301 [7.65] |
| | H | 16 | 0.315 ± 0.004 [8.0 ± 0.10] | 0.124 [3.15] | 0.31 [7.87] |


For technical questions, contact: tantalum@vishay.com
THIS DOCUMENT IS SUBJECT TO CHANGE WITHOUT NOTICE. THE PRODUCTS DESCRIBED HEREIN AND THIS DOCUMENT ARE SUBJECT TO SPECIFIC DISCLAIMERS, SET FORTH AT www.vishay.com/doc?91000

| **CARRIER TAPE DIMENSIONS** in inches [millimeters] | | | | | |
|---|---|---|---|---|---|
| **TYPE** | **CASE CODE** | **TAPE WIDTH W IN mm** | **$P_1$** | **$K_{0\ max.}$** | **$B_{1\ max.}$** |
| 195D | A | 8 | 0.157 ± 0.004 [4.0 ± 0.10] | 0.058 [1.47] | 0.139 [3.53] |
| | B | 12 | | 0.059 [1.50] | 0.189 [4.80] |
| | C | 8 | | 0.054 [1.37] | 0.093 [2.36] |
| | D | 12 | | 0.067 [1.70] | 0.179 [4.55] |
| | E | 12 | | 0.074 [1.88] | 0.239 [6.07] |
| | F | 12 | 0.315 ± 0.004 [8.0 ± 0.10] | 0.076 [1.93] | 0.259 [6.58] |
| | G | 12 | 0.157 ± 0.004 [4.0 ± 0.10] | 0.109 [2.77] | 0.301 [7.65] |
| | H (1) | 12 | 0.472 ± 0.004 [12.0 ± 0.1] | 0.122 [3.11] | 0.163 [4.14] |
| | R | 12 | 0.315 ± 0.004 [8.0 ± 0.10] | 0.149 [3.78] | 0.296 [7.52] |
| | S | 8 | 0.157 ± 0.004 [4.0 ± 0.10] | 0.058 [1.47] | 0.149 [3.78] |
| | V | 8 | | 0.060 [1.52] | 0.150 [3.80] |
| | X | 12 | | 0.069 [1.75] | 0.296 [7.52] |
| | Y | 12 | | 0.089 [2.26] | 0.296 [7.52] |
| | Z | 12 | | 0.114 [2.89] | 0.288 [7.31] |
| 194D CWR06 CWR16 CWR26 | A | 8 | 0.157 ± 0.004 [4.0 ± 0.10] | 0.069 [1.75] | 0.139 [3.53] |
| | B | 12 | | 0.073 [1.85] | 0.189 [4.80] |
| | C | 12 | | 0.069 [1.75] | 0.244 [6.20] |
| | D | 12 | | 0.068 [1.72] | 0.191 [4.85] |
| | E | 12 | | 0.074 [1.88] | 0.239 [6.07] |
| | F | 12 | 0.315 ± 0.004 [8.0 ± 0.10] | 0.091 [2.31] | 0.262 [6.65] |
| | G | 16 | | 0.134 [3.40] | 0.289 [7.34] |
| | H | 16 | | 0.129 [3.28] | 0.319 [8.10] |
| 597D T97 13008 | D | 16 | 0.317 ± 0.004 [8.0 ± 0.10] | 0.150 [3.80] | 0.313 [7.95] |
| | E | 16 | | 0.173 [4.40] | 0.343 [8.70] |
| | F | 16 | 0.476 ± 0.004 [12.0 ± 0.1] | 0.205 [5.20] | 0.309 [7.85] |
| | H | 16 | | 0.224 [5.70] | 0.313 [7.95] |
| | M | 16 | | 0.193 [4.90] | 0.339 [8.60] |
| | N | 16 | | 0.283 [7.20] | 0.323 [8.20] |
| | R | 16 | | 0.159 [4.05] | 0.313 [7.95] |
| | V | 12 | 0.317 ± 0.004 [8.0 ± 0.10] | 0.088 [2.23] | 0.300 [7.62] |
| | Z | 16 | 0.476 ± 0.004 [12.0 ± 0.1] | 0.239 [6.06] | 0.311 [7.90] |
| T95 | A | 8 | 0.157 ± 0.004 [4.0 ± 0.10] | 0.063 [1.60] | 0.152 [3.86] |
| | B | 12 | | 0.088 [2.23] | 0.166 [4.21] |
| | C | 12 | | 0.117 [2.97] | 0.290 [7.36] |
| | D | 12 | 0.317 ± 0.004 [8.0 ± 0.10] | 0.119 [3.02] | 0.296 [7.52] |
| | R | 12 | | 0.149 [3.78] | 0.296 [7.52] |
| | S | 8 | 0.157 ± 0.004 [4.0 ± 0.10] | 0.058 [1.47] | 0.149 [3.78] |
| | V | 8 | | 0.060 [1.52] | 0.150 [3.80] |
| | X | 12 | | 0.069 [1.75] | 0.296 [7.52] |
| | Y | 12 | | 0.089 [2.26] | 0.296 [7.52] |
| | Z | 12 | | 0.114 [2.89] | 0.288 [7.31] |
| 14002 | B | 12 | 0.157 ± 0.004 [4.0 ± 0.10] | 0.088 [2.23] | 0.166 [4.21] |
| | C | 12 | | 0.117 [2.97] | 0.290 [7.36] |
| | D | 12 | 0.317 ± 0.004 [8.0 ± 0.10] | 0.119 [3.02] | 0.296 [7.52] |
| | R | 12 | | 0.149 [3.78] | 0.296 [7.52] |
| T96 | R | 16 | 0.476 ± 0.004 [12.0 ± 0.1] | 0.159 [4.05] | 0.313 [7.95] |
| T98 | F | 16 | 0.476 ± 0.004 [12.0 ± 0.1] | 0.239 [6.06] | 0.311 [7.90] |
| | M | 16 | | 0.193 [4.90] | 0.339 [8.60] |
| | Z | 16 | | 0.272 [6.90] | 0.307 [7.80] |

**Note**

(1) H case only, packaging code T: lengthwise orientation at capacitors in tape


For technical questions, contact: tantalum@vishay.com
THIS DOCUMENT IS SUBJECT TO CHANGE WITHOUT NOTICE. THE PRODUCTS DESCRIBED HEREIN AND THIS DOCUMENT ARE SUBJECT TO SPECIFIC DISCLAIMERS, SET FORTH AT www.vishay.com/doc?91000

**PAD DIMENSIONS** in inches [millimeters]

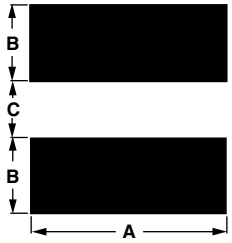


| CASE CODE | WIDTH (A) | PAD METALLIZATION (B) | SEPARATION (C) |
|---|---|---|---|
| **592D / W - 591D** | | | |
| A | 0.075 [1.9] | 0.050 [1.3] | 0.050 [1.3] |
| B | 0.118 [3.0] | 0.059 [1.5] | 0.059 [1.5] |
| C | 0.136 [3.5] | 0.090 [2.3] | 0.122 [3.1] |
| D | 0.180 [4.6] | 0.090 [2.3] | 0.134 [3.4] |
| M | 0.256 [6.5] | Anode pad: 0.095 [2.4]<br>Cathode pad: 0.067 [1.7] | 0.138 [3.5] |
| R | 0.240 [6.1] | Anode pad: 0.095 [2.4]<br>Cathode pad: 0.067 [1.7] | 0.118 [3.0] |
| S | 0.067 [1.7] | 0.032 [0.8] | 0.043 [1.1] |
| X | 0.310 [7.9] | 0.120 [3.0] | 0.360 [9.2] |
| **595D - 594D** | | | |
| T | 0.059 [1.5] | 0.028 [0.7] | 0.024 [0.6] |
| S | 0.067 [1.7] | 0.032 [0.8] | 0.043 [1.1] |
| A | 0.083 [2.1] | 0.050 [1.3] | 0.050 [1.3] |
| B | 0.118 [3.0] | 0.059 [1.5] | 0.059 [1.5] |
| C | 0.136 [3.5] | 0.090 [2.3] | 0.122 [3.1] |
| D | 0.180 [4.6] | 0.090 [2.3] | 0.134 [3.4] |
| G | 0.156 [4.05] | 0.090 [2.3] | 0.082 [2.1] |
| M | 0.110 [2.8] | 0.087 [2.2] | 0.134 [3.4] |
| R | 0.248 [6.3] | 0.090 [2.3] | 0.140 [3.6] |
| **195D** | | | |
| A | 0.067 [1.7] | 0.043 [1.1] | 0.028 [0.7] |
| B | 0.063 [1.6] | 0.047 [1.2] | 0.047 [1.2] |
| C | 0.059 [1.5] | 0.031 [0.8] | 0.024 [0.6] |
| D | 0.090 [2.3] | 0.055 [1.4] | 0.047 [1.2] |
| E | 0.090 [2.3] | 0.055 [1.4] | 0.079 [2.0] |
| F | 0.140 [3.6] | 0.063 [1.6] | 0.087 [2.2] |
| G | 0.110 [2.8] | 0.059 [1.5] | 0.126 [3.2] |
| H | 0.154 [3.9] | 0.063 [1.6] | 0.140 [3.6] |
| N | 0.244 [6.2] | 0.079 [2.0] | 0.118 [3.0] |
| R | 0.248 [6.3] | 0.090 [2.3] | 0.140 [3.6] |
| S | 0.079 [2.0] | 0.039 [1.0] | 0.039 [1.0] |
| V | 0.114 [2.9] | 0.039 [1.0] | 0.039 [1.0] |
| X | 0.118 [3.0] | 0.067 [1.7] | 0.122 [3.1] |
| Y | 0.118 [3.0] | 0.067 [1.7] | 0.122 [3.1] |
| Z | 0.118 [3.0] | 0.067 [1.7] | 0.122 [3.1] |


THIS DOCUMENT IS SUBJECT TO CHANGE WITHOUT NOTICE. THE PRODUCTS DESCRIBED HEREIN AND THIS DOCUMENT ARE SUBJECT TO SPECIFIC DISCLAIMERS, SET FORTH AT www.vishay.com/doc?91000

**PAD DIMENSIONS** in inches [millimeters]

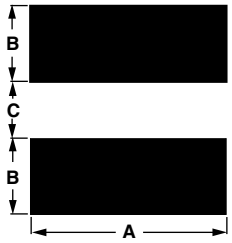


| CASE CODE | WIDTH (A) | PAD METALLIZATION (B) | SEPARATION (C) |
|---|---|---|---|
| **CWR06 / CWR16 / CWR26 - 194D - 695D** | | | |
| A | 0.065 [1.6] | 0.50 [1.3] | 0.040 [1.0] |
| B | 0.065 [1.6] | 0.70 [1.8] | 0.055 [1.4] |
| C | 0.065 [1.6] | 0.70 [1.8] | 0.120 [3.0] |
| D | 0.115 [2.9] | 0.70 [1.8] | 0.070 [1.8] |
| E | 0.115 [2.9] | 0.70 [1.8] | 0.120 [3.0] |
| F | 0.150 [3.8] | 0.70 [1.8] | 0.140 [3.6] |
| G | 0.125 [3.2] | 0.70 [1.8] | 0.170 [4.3] |
| H | 0.165 [4.2] | 0.90 [2.3] | 0.170 [4.3] |
| **T95** | | | |
| B | 0.120 [3.0] | 0.059 [1.5] | 0.059 [1.5] |
| C | 0.136 [3.5] | 0.090 [2.3] | 0.120 [3.1] |
| D | 0.180 [4.6] | 0.090 [2.3] | 0.136 [3.47] |
| R | 0.248 [6.3] | 0.090 [2.3] | 0.140 [3.6] |
| S | 0.080 [2.03] | 0.040 [1.02] | 0.040 [1.02] |
| V | 0.114 [2.9] | 0.040 [1.02] | 0.040 [1.02] |
| X, Y, Z | 0.114 [2.9] | 0.065 [1.65] | 0.122 [3.1] |
| **14002** | | | |
| B | 0.120 [3.0] | 0.059 [1.5] | 0.059 [1.5] |
| C | 0.136 [3.5] | 0.090 [2.3] | 0.120 [3.1] |
| D | 0.180 [4.6] | 0.090 [2.3] | 0.136 [3.47] |
| R | 0.248 [6.3] | 0.090 [2.3] | 0.140 [3.6] |
| **T96** | | | |
| R | 0.248 [6.3] | 0.090 [2.3] | 0.140 [3.6] |
| **597D - T97 - T98 - 13008** | | | |
| D, E, V | 0.196 [4.9] | 0.090 [2.3] | 0.140 [3.6] |
| F, R, Z | 0.260 [6.6] | 0.090 [2.3] | 0.140 [3.6] |
| M, H, N | 0.284 [7.2] | 0.090 [2.3] | 0.140 [3.6] |


THIS DOCUMENT IS SUBJECT TO CHANGE WITHOUT NOTICE. THE PRODUCTS DESCRIBED HEREIN AND THIS DOCUMENT ARE SUBJECT TO SPECIFIC DISCLAIMERS, SET FORTH AT www.vishay.com/doc?91000

## RECOMMENDED REFLOW PROFILES

Capacitors should withstand reflow profile as per J-STD-020 standard, three cycles.

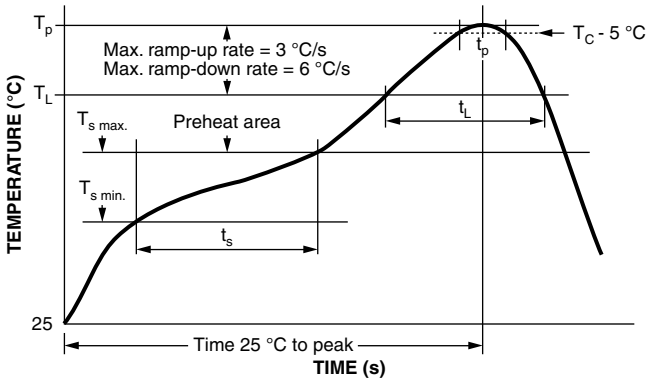


| PROFILE FEATURE | SnPb EUTECTIC ASSEMBLY | LEAD (Pb)-FREE ASSEMBLY |
|---|---|---|
| **Preheat / soak** | | |
| Temperature min. ($T_{s\ min.}$) | 100 °C | 150 °C |
| Temperature max. ($T_{s\ max.}$) | 150 °C | 200 °C |
| Time ($t_s$) from ($T_{s\ min.}$ to $T_{s\ max.}$) | 60 s to 120 s | 60 s to 120 s |
| **Ramp-up** | | |
| Ramp-up rate ($T_L$ to $T_p$) | 3 °C/s max. | 3 °C/s max. |
| Liquidus temperature ($T_L$) | 183 °C | 217 °C |
| Time ($t_L$) maintained above $T_L$ | 60 s to 150 s | 60 s to 150 s |
| Peak package body temperature ($T_p$) | Depends on type and case – see table below | |
| Time ($t_p$)* within 5 °C of the specified classification temperature ($T_c$) | 20 s | 30 s |
| **Ramp-down** | | |
| Ramp-down rate ($T_p$ to $T_L$) | 6 °C/s max. | 6 °C/s max. |
| Time 25 °C to peak temperature | 6 min max. | 8 min max. |

## PEAK PACKAGE BODY TEMPERATURE ($T_p$)

| TYPE / CASE CODE | PEAK PACKAGE BODY TEMPERATURE ($T_p$) | |
|---|---|---|
| | SnPb EUTECTIC PROCESS | LEAD (Pb)-FREE PROCESS |
| 591D / 592D - all cases, except X25H, M and R cases | 235 °C | 260 °C |
| 591D / 592D - X25H, M and R cases | 220 °C | 250 °C |
| 594D / 595D - all cases except C, D, and R | 235 °C | 260 °C |
| 594D / 595D - C, D, and R case | 220 °C | 250 °C |
| T95 A, B, S, V, X, Y cases | 235 °C | 260 °C |
| T95 C, D, R, and Z cases | 220 °C | 250 °C |
| 14002 B case | 235 °C | n/a |
| 14002 C, D, and R cases | 220 °C | n/a |
| T96 R case | 220 °C | 250 °C |
| 195D all cases, except G, H, R, and Z | 235 °C | 260 °C |
| 195D G, H, R, and Z cases | 220 °C | 250 °C |
| 695D all cases, except G and H cases | 235 °C | 260 °C |
| 695D G, H cases | 220 °C | 250 °C |
| 597D, T97, T98 all cases, except V case | 220 °C | 250 °C |
| 597D, T97, T98 V case | 235 °C | 260 °C |
| 194D all cases, except H and G cases | 235 °C | 260 °C |
| 194D H and G cases | 220 °C | 250 °C |


THIS DOCUMENT IS SUBJECT TO CHANGE WITHOUT NOTICE. THE PRODUCTS DESCRIBED HEREIN AND THIS DOCUMENT ARE SUBJECT TO SPECIFIC DISCLAIMERS, SET FORTH AT www.vishay.com/doc?91000

## GUIDE TO APPLICATION

1. **AC Ripple Current:** the maximum allowable ripple current shall be determined from the formula:

$$I_{RMS} = \sqrt{\frac{P}{R_{ESR}}}$$

where,

P = power dissipation in W at +25 °C as given in the tables in the product datasheets (Power Dissipation).

$R_{ESR}$ = the capacitor equivalent series resistance at the specified frequency

2. **AC Ripple Voltage:** the maximum allowable ripple voltage shall be determined from the formula:

$$V_{RMS} = I_{RMS} \times Z$$

or, from the formula:

$$V_{RMS} = Z\sqrt{\frac{P}{R_{ESR}}}$$

where,

P = power dissipation in W at +25 °C as given in the tables in the product datasheets (Power Dissipation).

$R_{ESR}$ = the capacitor equivalent series resistance at the specified frequency

Z = the capacitor impedance at the specified frequency

2.1 The sum of the peak AC voltage plus the applied DC voltage shall not exceed the DC voltage rating of the capacitor.

2.2 The sum of the negative peak AC voltage plus the applied DC voltage shall not allow a voltage reversal exceeding 10 % of the DC working voltage at +25 °C.

3. **Reverse Voltage:** solid tantalum capacitors are not intended for use with reverse voltage applied. However, they have been shown to be capable of withstanding momentary reverse voltage peaks of up to 10 % of the DC rating at 25 °C and 5 % of the DC rating at +85 °C.

4. **Temperature Derating:** if these capacitors are to be operated at temperatures above +25 °C, the permissible RMS ripple current shall be calculated using the derating factors as shown:

| TEMPERATURE | DERATING FACTOR |
|---|---|
| +25 °C | 1.0 |
| +85 °C | 0.9 |
| +125 °C | 0.4 |

5. **Power Dissipation:** power dissipation will be affected by the heat sinking capability of the mounting surface. Non-sinusoidal ripple current may produce heating effects which differ from those shown. It is important that the equivalent $I_{RMS}$ value be established when calculating permissible operating levels. (Power dissipation calculated using derating factor (see paragraph 4)).

6. **Attachment:**

6.1 **Soldering:** capacitors can be attached by conventional soldering techniques: vapor phase, convection reflow, infrared reflow, and hot plate methods. The soldering profile charts show recommended time / temperature conditions for soldering. Preheating is recommended. The recommended maximum ramp rate is 3 °C per second. Attachment with a soldering iron is not recommended due to the difficulty of controlling temperature and time at temperature. The soldering iron must never come in contact with the capacitor. For details see www.vishay.com/doc?40214.

7. **Recommended Mounting Pad Geometries:** the nib must have sufficient clearance to avoid electrical contact with other components. The width dimension indicated is the same as the maximum width of the capacitor. This is to minimize lateral movement.

8. **Cleaning (Flux Removal) After Soldering:** TANTAMOUNT™ capacitors are compatible with all commonly used solvents such as TES, TMS, Prelete, Chlorethane, Terpene and aqueous cleaning media. However, CFC / ODS products are not used in the production of these devices and are not recommended. Solvents containing methylene chloride or other epoxy solvents should be avoided since these will attack the epoxy encapsulation material.


For technical questions, contact: tantalum@vishay.com
THIS DOCUMENT IS SUBJECT TO CHANGE WITHOUT NOTICE. THE PRODUCTS DESCRIBED HEREIN AND THIS DOCUMENT ARE SUBJECT TO SPECIFIC DISCLAIMERS, SET FORTH AT www.vishay.com/doc?91000

# Solid Tantalum Chip Capacitors
# MIL-PRF-55365 Qualified and DLA Approved

| ELECTRICAL PERFORMANCE CHARACTERISTICS | | | |
|---|---|---|---|
| **ITEM** | **PERFORMANCE CHARACTERISTICS** | | |
| Category temperature range | -55 °C to +85 °C (to +125 °C with voltage derating) | | |
| Capacitance tolerance | ± 20 %, ± 10 %, tested via bridge method, at 25 °C, 120 Hz | | |
| Dissipation factor | Limit per Standard Ratings table. Tested via bridge method, at 25 °C, 120 Hz | | |
| ESR | Limit per Standard Ratings table. Tested via bridge method, at 25 °C, 100 kHz | | |
| Leakage current | After application of rated voltage applied to capacitors for 5 min using a steady source of power with 1 kΩ resistor in series with the capacitor under test, leakage current at 25 °C is not more than described in Standard Ratings table of appropriate datasheet.<br>*Note that the leakage current varies with temperature and applied voltage. See graph below for the appropriate adjustment factor.* | | |
| Reverse voltage | Capacitors are capable of withstanding peak voltages in the reverse direction equal to:<br>10 % of the DC rating at +25 °C<br>5 % of the DC rating at +85 °C<br>1 % of the DC rating at +125 °C<br>Vishay does not recommend intentional or repetitive application of reverse voltage. | | |
| Ripple current | For maximum ripple current values calculation (at 25 °C) refer to “Guide to Application” part of product guide which is linked with relevant datasheet. If capacitors are to be used at temperatures above +25 °C, the permissible ripple current (or voltage) shall be calculated using the derating factors:<br>1.0 at +25 °C<br>0.9 at +85 °C<br>0.4 at +125 °C | | |
| Maximum operating and surge voltages vs. temperature | **+85 °C** | | **+125 °C** |
| | **RATED VOLTAGE (V)** | **SURGE VOLTAGE (V)** | **CATEGORY VOLTAGE (V)** |
| | 4.0 | 5.3 | 2.7 |
| | 6.3 | 8.0 | 4.0 |
| | 10 | 13.3 | 6.7 |
| | 15 / 16 | 20 | 10 |
| | 20 | 26.7 | 13.3 |
| | 25 | 33.3 | 16.7 |
| | 35 | 46.7 | 23.3 |
| | 50 | 66.7 | 33.3 |
| Recommended voltage derating guidelines (below 85 °C) | **VOLTAGE RAIL (V)** | **CAPACITOR VOLTAGE RATING (V)** | |
| | ≤ 3.3 | 6.3 | |
| | 5 | 10 | |
| | 10 | 20 | |
| | 12 | 25 | |
| | 15 | 35 | |
| | 24 | 50 or series configuration | |

**Notes**

- All information presented in this document reflects typical performance characteristics
- For more information about recommended voltage derating see: www.vishay.com/doc?40246


For technical questions, contact: tantalum@vishay.com
THIS DOCUMENT IS SUBJECT TO CHANGE WITHOUT NOTICE. THE PRODUCTS DESCRIBED HEREIN AND THIS DOCUMENT ARE SUBJECT TO SPECIFIC DISCLAIMERS, SET FORTH AT www.vishay.com/doc?91000

## TYPICAL LEAKAGE CURRENT - TEMPERATURE FACTOR

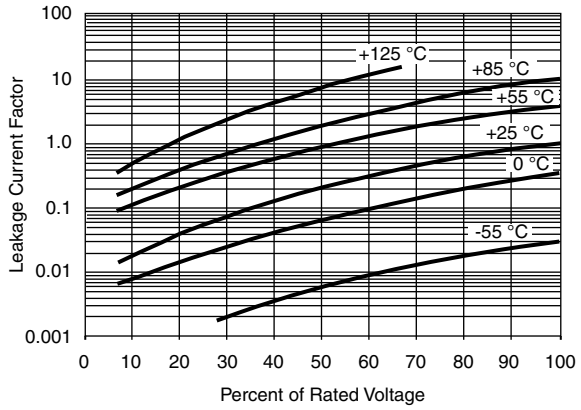


**Notes**

- **At +25 °C**, the leakage current shall not exceed the value listed in the Standard Ratings table
- **At +85 °C**, the leakage current shall not exceed 10 times the value listed in the Standard Ratings table
- **At +125 °C**, the leakage current shall not exceed 12 times the value listed in the Standard Ratings table

## ENVIRONMENTAL PERFORMANCE CHARACTERISTICS

| ITEM | CONDITION | POST TEST PERFORMANCE |
|---|---|---|
| Moisture resistance | MIL-STD-202, method 106, 20 cycles | Capacitance change: Within ± 15 % of initial value<br>Dissipation factor: Shall not exceed 150 % of initial limit<br>Leakage current: Shall not exceed 200 % of initial limit<br>Visual examination: there shall be no evidence of harmful corrosion, mechanical damage, or obliteration of marking (if applicable) |
| Stability at low and high temperatures | MIL-PRF-55365<br>Step / Test Temperature (°C):<br>1: +25 ± 3<br>2: -55 + 0 / - 6<br>3: +25 ± 3<br>4: +85 + 4 / - 0<br>5: +125 + 4 / - 0<br>6: +25 ± 3 | Delta cap limit at -55 °C is ± 10 % (20 % for CWR15) of initial value<br>Delta cap limit at 85 °C is ± 10 % (15 % for CWR15) of initial value<br>Delta cap limit at 125 °C is ± 15 % (20 % for CWR15) of initial value<br>Delta cap at step 3 and final step 25 °C is ± 5 % (10 % for CWR15) of initial value<br>DCL at 85 °C: 10 x initial specified value<br>DCL at 125 °C: 12 x initial specified value<br>DCL at 25 °C: initial specified value at rated voltage<br>DF change: refer to performance specification sheet for applicable capacitor style |
| Surge voltage | MIL-PRF-55365<br>1000 successive test cycles at 85 °C of applicable surge voltage (as specified in the table above), in series with a 33 Ω resistor at the rate of 30 s ON, 30 s OFF | Capacitance change: Within ± 5 % of initial value<br>Dissipation factor: Initial specified limit<br>Leakage current: Initial specified limit |
| Life test at +85 °C | MIL-STD-202, method 108<br>2000 h application of rated voltage at 85 °C | Capacitance change: Within ± 5 % (10 % for CWR15) of initial value<br>Dissipation factor: Initial specified limit<br>Leakage current: Shall not exceed 200 % of initial limit<br>There shall be no evidence of harmful corrosion or obliteration of marking (if applicable), mechanical damage, intermittent shorts, or permanent shorts or opens |
| Life test at +125 °C | MIL-STD-202, method 108<br>2000 h application 2/3 of rated voltage at 125 °C | Capacitance change: Within ± 5 % (10 % for CWR15) of initial value<br>Dissipation factor: Initial specified limit<br>Leakage current: Shall not exceed 200 % of initial limit<br>There shall be no evidence of harmful corrosion or obliteration of marking (if applicable), mechanical damage, intermittent shorts, or permanent shorts or opens |


For technical questions, contact: tantalum@vishay.com
THIS DOCUMENT IS SUBJECT TO CHANGE WITHOUT NOTICE. THE PRODUCTS DESCRIBED HEREIN AND THIS DOCUMENT ARE SUBJECT TO SPECIFIC DISCLAIMERS, SET FORTH AT www.vishay.com/doc?91000

| MECHANICAL PERFORMANCE CHARACTERISTICS | | |
|---|---|---|
| **ITEM** | **CONDITION** | **POST TEST PERFORMANCE** |
| Vibration | MIL-STD-202, method 204, condition D, 10 Hz to 2000 Hz, 20 *g* peak, in 2 directions, 4 hours in each, at rated voltage | Measurements during vibration: During the last cycle of each plane, electrical measurements shall be made to determine the intermittent open or short circuits. Intermittent contact and arcing shall also be determined.<br>Measurements after vibration: not applicable<br>Visual examination after test: there shall be no evidence of mechanical damage |
| Thermal shock (mounted) | MIL-STD-202, method 107<br>-65 °C / +125 °C, for 10 cycles, 30 min at each temperature | Capacitance change: Within ± 5 % of initial value<br>Dissipation factor: Initial specified limit<br>Leakage current: Initial specified limit<br>Visual examination: there shall be no evidence of harmful corrosion, mechanical damage, or obliteration of marking (if applicable) |
| Resistance to soldering heat | MIL-STD-202, method 210, condition J (convection reflow, 235 °C ± 5 °C), one heat cycle | Capacitance change: Within ± 5 % of initial value<br>Dissipation factor: Initial specified limit<br>Leakage current: Initial specified limit<br>Visual examination: there shall be no evidence of mechanical damage |
| Solderability | MIL-STD-202, method 208, ANSI/J-STD-002, test B (dip- and look, 245 °C ± 5 °C).<br>Preconditioning per category C (steam aging, 8 hours).<br>Does not apply to gold terminations. | Solder coating of all capacitors shall meet specified requirements.<br>There shall be no mechanical or visual damage to capacitors post-conditioning. |
| Resistance to solvents | MIL-STD-202, method 215 | There shall be no mechanical or visual damage to capacitors post-conditioning. Body marking shall remain legible and shall not smear. |
| Flammability | Encapsulation materials meet UL 94 V-0 with an oxygen index of 32 % | |


For technical questions, contact: tantalum@vishay.com
THIS DOCUMENT IS SUBJECT TO CHANGE WITHOUT NOTICE. THE PRODUCTS DESCRIBED HEREIN AND THIS DOCUMENT ARE SUBJECT TO SPECIFIC DISCLAIMERS, SET FORTH AT www.vishay.com/doc?91000

# Disclaimer

ALL PRODUCT, PRODUCT SPECIFICATIONS AND DATA ARE SUBJECT TO CHANGE WITHOUT NOTICE TO IMPROVE RELIABILITY, FUNCTION OR DESIGN OR OTHERWISE.

Vishay Intertechnology, Inc., its affiliates, agents, and employees, and all persons acting on its or their behalf (collectively, “Vishay”), disclaim any and all liability for any errors, inaccuracies or incompleteness contained in any datasheet or in any other disclosure relating to any product.

Vishay makes no warranty, representation or guarantee regarding the suitability of the products for any particular purpose or the continuing production of any product. To the maximum extent permitted by applicable law, Vishay disclaims (i) any and all liability arising out of the application or use of any product, (ii) any and all liability, including without limitation special, consequential or incidental damages, and (iii) any and all implied warranties, including warranties of fitness for particular purpose, non-infringement and merchantability.

Statements regarding the suitability of products for certain types of applications are based on Vishay's knowledge of typical requirements that are often placed on Vishay products in generic applications. Such statements are not binding statements about the suitability of products for a particular application. It is the customer's responsibility to validate that a particular product with the properties described in the product specification is suitable for use in a particular application. Parameters provided in datasheets and / or specifications may vary in different applications and performance may vary over time. All operating parameters, including typical parameters, must be validated for each customer application by the customer's technical experts. Product specifications do not expand or otherwise modify Vishay's terms and conditions of purchase, including but not limited to the warranty expressed therein.

Hyperlinks included in this datasheet may direct users to third-party websites. These links are provided as a convenience and for informational purposes only. Inclusion of these hyperlinks does not constitute an endorsement or an approval by Vishay of any of the products, services or opinions of the corporation, organization or individual associated with the third-party website. Vishay disclaims any and all liability and bears no responsibility for the accuracy, legality or content of the third-party website or for that of subsequent links.

Except as expressly indicated in writing, Vishay products are not designed for use in medical, life-saving, or life-sustaining applications or for any other application in which the failure of the Vishay product could result in personal injury or death. Customers using or selling Vishay products not expressly indicated for use in such applications do so at their own risk. Please contact authorized Vishay personnel to obtain written terms and conditions regarding products designed for such applications.

No license, express or implied, by estoppel or otherwise, to any intellectual property rights is granted by this document or by any conduct of Vishay. Product names and markings noted herein may be trademarks of their respective owners.

***© 2024 VISHAY INTERTECHNOLOGY, INC. ALL RIGHTS RESERVED***