Model CB3 & CB3LV

HCMOS/TTL Clock Oscillator

FEATURES

- **Standard 7.0mm x 5.0mm 4-Pad Surface Mount Package**
- **HCMOS/TTL Compatible Output**
- **Fundamental and 3rd Overtone Crystal Designs**
- Frequency Range 1 – 200 MHz
- Frequency Stability ±50 ppm Standard, ±25 ppm and ±20 ppm Available
- Operating Voltages +5.0Vdc or +3.3Vdc
- Operating Temperature to -40°C to +85°C
- Output Enable Standard
- Tape & Reel Packaging
- **RoHS/Green Compliant (6/6)**

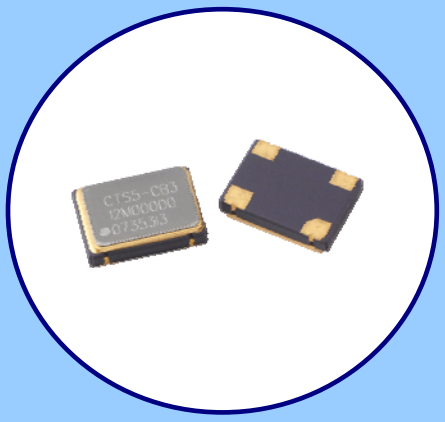

APPLICATIONS

Applications for Model CB3 and CB3LV include digital video, networking equipment, wireless communications, broadband access, Ethernet/Gigabit Ethernet, microprocessors/DSP/FPGA, storage area networks, fiber channel, computers and peripherals, test and measurement, SONET/SDH/DWDM, base stations and Pico cells.

ORDERING INFORMATION

CB3 □ - □□ - □□□ M □□□□□□

SUPPLY VOLTAGE

LV = +3.3Vdc
Blank = +5.0Vdc

FREQUENCY IN MHz

M - indicates MHz and decimal point. [3]

FREQUENCY STABILITY

6 = ± 20 ppm [1]
5 = ± 25 ppm
3 = ± 50 ppm [std]
7 = ± 32 ppm [2]
2 = ± 100 ppm [2]

OPERATING TEMPERATURE RANGE

C = -20°C to +70°C [standard]
I = -40°C to +85°C [1]

1] 6I Stability/Temperature combination is not available.

2] These stabilities are not recommended for new designs.

3] Frequency is recorded with only leading significant digits before the 'M' and 4 - 6 significant digits after the 'M' (including zeros).
[Ex. 3.579545 MHz, code as 3M579545; 14.31818 MHz, code as 14M31818; 125 MHz, code as 125M0000]

4] CTS Distributors may add a -T or -1 at the end of the part number to indicate Tape and Reel packaging.

Not all performance combinations and frequencies may be available.
Contact your local CTS Representative or CTS Customer Service for availability.

PACKAGING INFORMATION [reference]

Device quantity is 1,000 pieces maximum per reel.

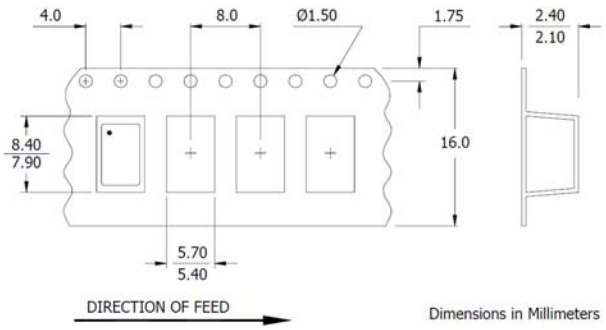

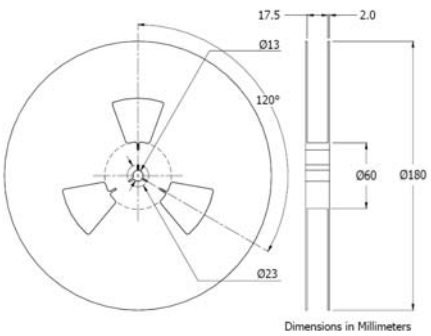

ELECTRICAL CHARACTERISTICS

	PARAMETER	SYMBOL	CONDITIONS	MIN	TYP	MAX	UNIT
ELECTRICAL PARAMETERS	Maximum Supply Voltage	V_{CC}	-	-0.5	-	+7.0	V
	Storage Temperature	T_{STG}	-	-40	-	+100	°C
	Frequency Range						
	CB3	f_O	-	1.5	-	107	MHz
	CB3LV		-	1.5	-	200	
	Frequency Stability	$\Delta f/f_O$	See Note 1 and Ordering Information	-	-	20,25,50 or 100	± ppm
	Aging	Δf	First year	-	3	5	± ppm
	Operating Temperature						
	Commercial	T_A	-	-20	25	+70	°C
	Industrial			-40		+85	
	Supply Voltage						
	CB3	V_{CC}	±10%	4.5	5.0	5.5	V
	CB3LV			3.0	3.3	3.6	
	Supply Current		Frequency Range Tested load condition noted for typical values.				
	CB3	I_{CC}	1.5MHz to 20MHz C_L=50pF	-	10	25	mA
			20.001MHz to 80MHz C_L=50pF	-	30	50	
			80.001MHz to 107MHz C_L=15pF	-	40	80	
	CB3LV		1.5MHz to 20MHz C_L=15pF	-	7	12	
			20.001MHz to 80MHz C_L=15pF	-	20	40	
			80.001MHz to 200MHz C_L=15pF	-	30	60	
	Output Load	C_L	1.5MHz to 50MHz	-	-	50	pF
			50.001MHz to 80MHz	-	-	30	
			80.001MHz to 200MHz	-	-	15	
	Output Voltage Levels						
	Logic '1' Level	V_{OH}	CMOS Load	90%V_{CC}	-	-	V
			10 TTL LOAD	V_{CC}-0.6V			
	Logic '0' Level	V_{OL}	CMOS	-	-	10%V_{CC}	
			TTL Load			0.4	
	Output Current						
	Logic '1' Level	I_{OH}	V_{OH} = 3.9V/2.2V V_{CC} = 4.5V/3.0V	-	-	-16/-8	mA
	Logic '0' Level	I_{OL}	V_{OL} = 0.4V V_{CC} = 4.5V/3.0V	-	-	+16/+8	
	Output Duty Cycle	SYM	@ 50% Level	45	-	55	%
	Rise and Fall Time		@ 10% - 90% Levels Tested load condition noted for typical values.				
	CB3	T_R, T_F	1.5MHz to 20MHz C_L=50pF	-	8	10	ns
			20.001MHz to 80MHz C_L=50pF	-	5	8	
			80.001MHz to 200MHz C_L=15pF	-	2.5	5	
	CB3LV		1.5MHz to 20MHz C_L=15pF	-	6	8	
			20.001MHz to 80MHz C_L=15pF	-	3	5	
			80.001MHz to 200MHz C_L=15pF	-	1.5	3	
	Start Up Time	T_S	Application of V_{CC}	-	-	10	ms
	Enable Function						
	Enable Input Voltage	V_{IH}	Pin 1 Logic '1', Output Enabled	2.0	-	-	V
	Disable Input Voltage	V_{IL}	Pin 1 Logic '0', Output Disabled	-	-	0.8	
	Enable Time	T_{PLZ}	Pin 1 Logic '1'	-	-	200	ns
	Standby Current	I_{ST}	Pin 1 Logic '0', Output Disabled	-	-	10	µA
	Period Jitter, Pk-Pk	-	-	-	-	50	ps
	Period Jitter, RMS	-	-	-	-	5	
	Phase Jitter, RMS	-	Bandwidth 12kHz - 20MHz	-	-	1	

Notes:

1. Inclusive of initial tolerance at time of shipment, changes in supply voltage, load, temperature and 1st year aging.

ELECTRICAL CHARACTERISTICS

LVCMOS OUTPUT WAVEFORM

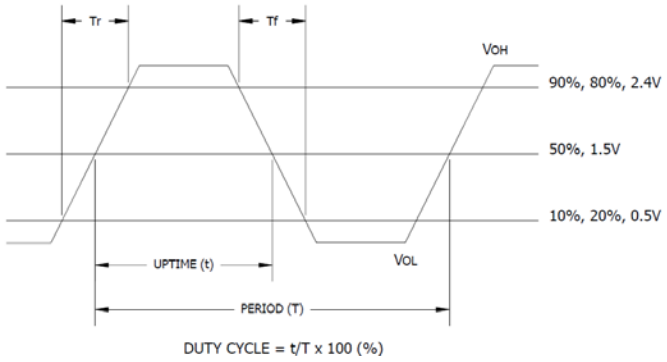

TEST CIRCUIT, CMOS LOAD

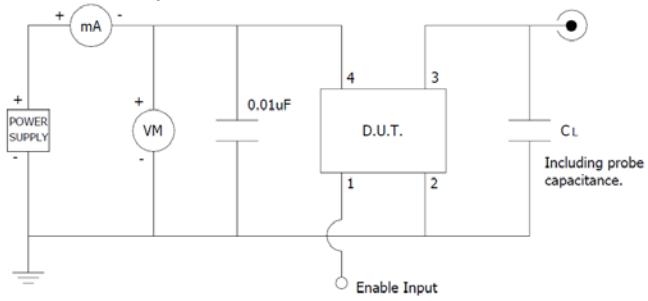

ENABLE TRUTH TABLE

PIN 1	PIN 3
Logic '1'	Output
Open	Output
Logic '0'	High Imp.

D.U.T. PIN ASSIGNMENTS

PIN	SYMBOL	DESCRIPTION
1	EOH	Enable
2	GND	Circuit & Package Ground
3	Output	RF Output
4	V_{CC}	Supply Voltage

MECHANICAL SPECIFICATIONS

PACKAGE DRAWING

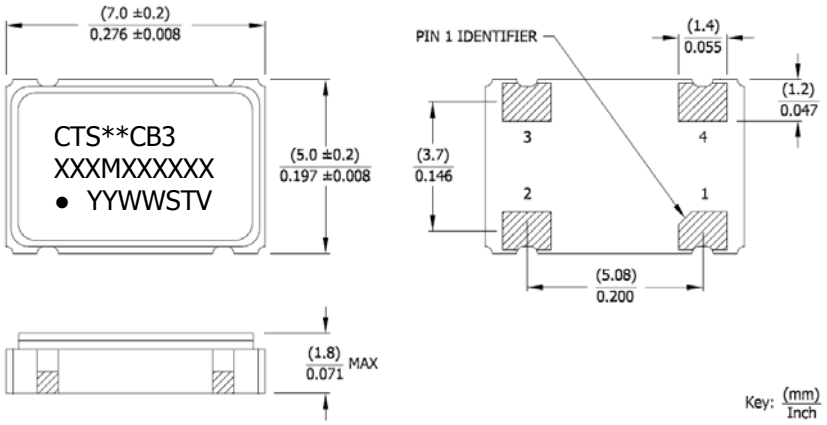

MARKING INFORMATION

1. ** – Manufacturing Site Code.
   [Note a dash may follow the site code and is acceptable.]
2. XXXMXXXXXX – Frequency is marked with only leading significant digits before the 'M' and 4 – 6 digits after the 'M' (including zeros).
   Ex. XMXXXXXX [3M579545]
   XXMXXXXX [14M31818]
   XXXMXXXX [125M0000]
3. YYWW – Date code, YY – year, WW – week.
4. ST – Frequency stability/temperature code.
   [Refer to Ordering Information.]
5. V – Voltage code. 3 = 3.3V, 5 = 5.0V.

NOTES

1. Termination pads [e4]. Barrier-plating is nickel [Ni] with gold [Au] flash plate.
2. Reflow conditions per JEDEC J-STD-020, 260°C maximum.
3. Moisture Sensitivity Level 1 per JEDEC J-STD-020.

SUGGESTED SOLDER PAD GEOMETRY

C_{BYPASS} should be ≥ 0.01 uF.

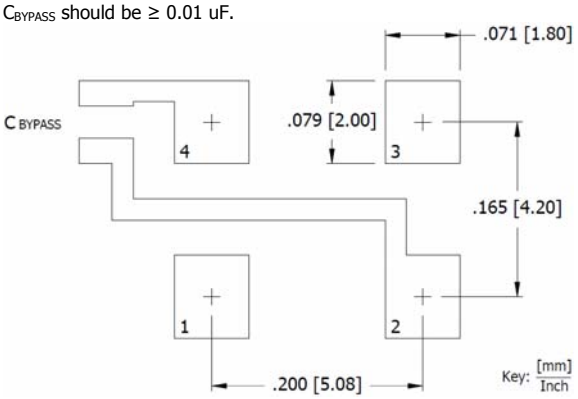

Mouser Electronics

Authorized Distributor

Click to View Pricing, Inventory, Delivery & Lifecycle Information:

CTS:

CB3-3C-49M152000 CB3-3C-32M768000 CB3LV-3C-4M000000 CB3LV-3C-29M491200 CB3-3C-44M736000 CB3LV-3C-24M000000 CB3-3C-33M333000 CB3LV-3C-10M000000 CB3LV-3C-16M384000 CB3-3C-12M000000 CB3LV-3C-20M480000 CB3-3C-40M000000 CB3-3C-14M318180 CB3LV-3C-20M000000 CB3LV-3C-1M843200 CB3LV-3C-30M000000 CB3-3C-3M686400 CB3-3C-18M432000 CB3LV-3C-60M000000 CB3-3C-72M000000 CB3-3C-51M840000 CB3LV-3C-19M440000 CB3LV-3C-51M840000 CB3-3C-6M176000 CB3LV-3C-16M000000 CB3-3C-66M666600 CB3-3C-15M360000 CB3LV-3C-32M768000 CB3-3C-4M000000 CB3LV-3C-14M318180 CB3-3C-45M000000 CB3-3C-20M000000 CB3-3C-60M000000 CB3-3C-10M000000 CB3LV-3C-45M000000 CB3-3C-20M480000 CB3LV-3C-80M000000 CB3LV-3C-15M360000 CB3LV-3C-66M666600 CB3-3C-32M000000 CB3LV-3C-33M333000 CB3-3C-7M372800 CB3LV-3C-7M372800 CB3LV-3C-12M000000 CB3LV-3C-18M432000 CB3LV-3C-24M704000 CB3LV-3C-3M686400 CB3LV-3C-12M352000 CB3LV-3C-6M176000 CB3LV-5I-20M0000 CB3LV-3I-33M0000 CB3LV-3I-24M5760 CB3LV-3I-125M0000 CB3LV-3I-66M0000 CB3LV-3I-33M3333 CB3LV-3I-27M0000 CB3LV-3I-48M0000 CB3LV-3I-100M0000 CB3-3I-7M3728 CB3-3I-1M8432 CB3LV-3I-51M8400 CB3LV-3I-3M6864 CB3-3I-24M7040 CB3-3I-16M0000 CB3LV-3I-1M8432 CB3LV-3I-24M7040 CB3LV-3I-49M1520 CB3-3I-18M4320 CB3LV-3I-1M5440 CB3LV-3I-20M0000 CB3LV-3I-7M3728 CB3-3I-32M7680 CB3-3I-32M0000 CB3LV-3I-14M31818 CB3-3I-72M0000 CB3LV-3I-6M1760 CB3LV-3I-80M0000 CB3-3I-8M0000 CB3LV-3I-29M4912 CB3LV-3I-60M0000 CB3-3I-6M1760 CB3-3I-15M3600 CB3LV-3I-45M0000 CB3LV-3I-8M0000 CB3-3I-12M3520 CB3-3I-12M2880 CB3LV-3I-15M3600 CB3LV-3I-66M6666 CB3LV-3I-19M4400 CB3LV-3I-64M0000 CB3LV-3I-24M0000 CB3LV-3I-16M3840 CB3LV-3I-40M0000 CB3LV-3I-33M3330 CB3-3I-29M4912 CB3-3I-25M0000 CB3-3I-49M1520 CB3-3I-10M0000 CB3LV-3I-16M0000 CB3-3I-24M0000